WASHDOWN MOTORS AND DRIVES

Industrial Motors
Commercial & Appliance Motors
Automation & Systems
Energy
Transmission & Distribution
Coatings

Solutions for **Washdown** Applications

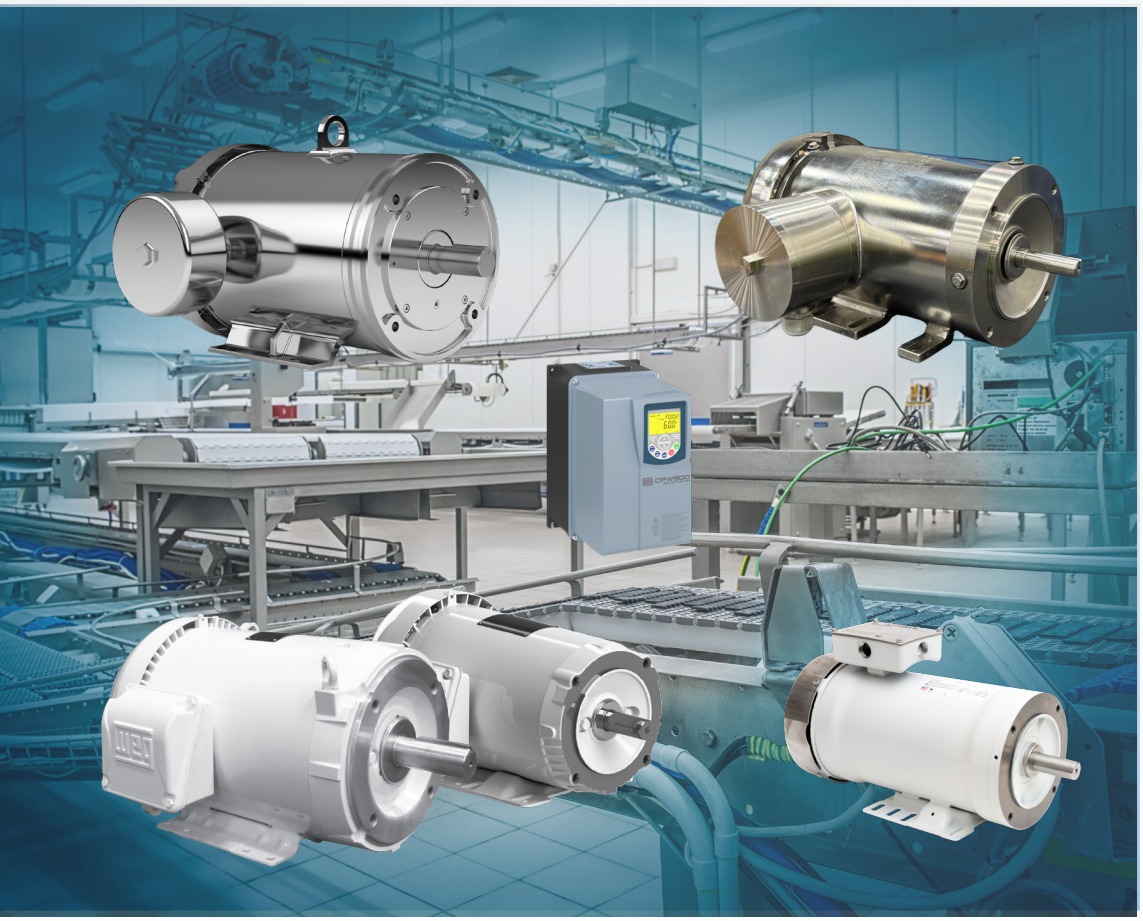

Driving efficiency and sustainability

CONTENTS

Washdown Motors Overview 04

HydroDuty Overview 05

HydroDuty Models 06

HydroDuty Drive Match 08

PickerPlus 10

Shark Overview 11

Shark Models 12

HydroWash Overview 14

HydroWash Models 16

HydroWash Drive Match 20

CFW500 Washdown Drive 22

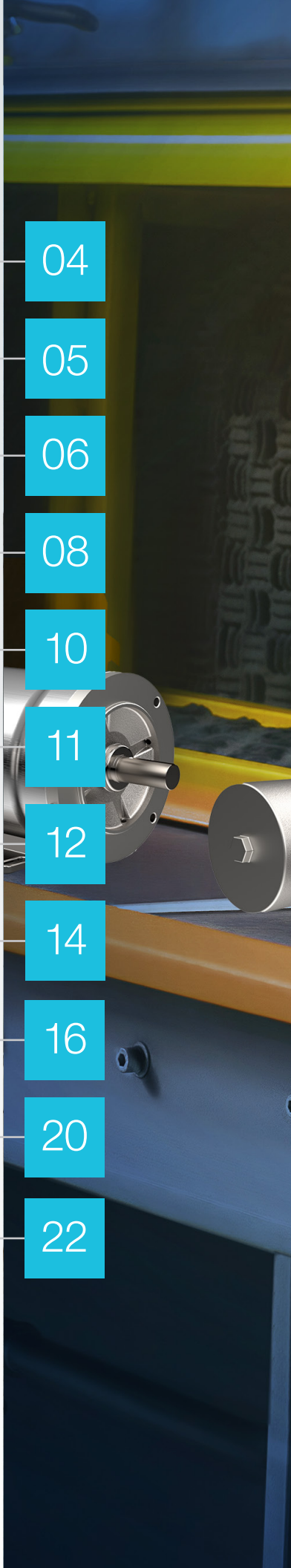

Encapsulated Washdown Motors

Encapsulated winding and our patented sealing system to ensure they will withstand the most severe applications.

Hydroduty™

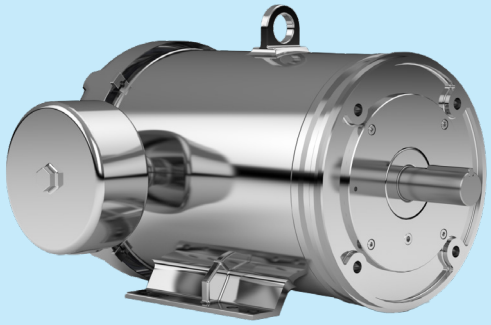

Our Ultimate Washdown Motor

- This is our ultimate stainless steel waterproof motor. It has been proven to provide 75% more cycles than other brands through extreme environment testing.
- Significantly reduces motor replacement and downtime costs
- Meets NEMA MG1 Part 31 for InverterDuty operation; 10:1 CT; 10:1 VT

EZ CONNECT TECHNOLOGY
Available on 56/140T frames

Performance Specifications

- 1/2 to 10 hp, 860, 1140, 1725 or 3450 RPM
- TENV or TEFC enclosures
- NEMA Frames 56C - 215TC
- Metric Frame 80-B5 and 100L
- Meets IP69K enclosure protection

PickerPlus™

Severe Duty Feather Picker Motor

- Withstands frequent sanitizing with high pressure sprays and caustic fluids.
- Designed to withstand extreme side loading requirements

Performance Specifications

- 3 hp, 1725 RPM
- TEFC enclosure
- 145TC NEMA or 100L Metric Frames
- Footless or Base Mounted
- C-Face
- Meets IP69K enclosure protection

General Purpose Washdown Motors

Shark™

Stainless Steel Washdown Motor

For use in food processing, pharmaceutical and other applications requiring extreme cleanliness.

- Insulation Class: F (Class H available under request).
- Efficiency: NEMA Premium @ 60hz and IE3 for 50hz.
- Degree of protection: IP66

- Enclosures: TEFC and TENV
- 0.33 to 30 HP
- 1200 to 3600 RPM
- Frames 56C to 286TC
- Internal Tropicalization

HydroWash™

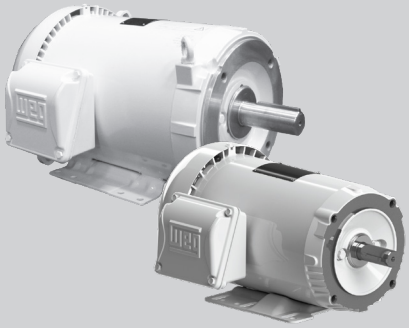

White Painted Washdown Motor

- Designed for long service life in general purpose washdown applications
- It provides extended service life that can reduce your downtime costs for motor replacement
- Meets NEMA MG1 Part 31 for Inverter Duty operation; 6:1 CT; 10:1 VT

Performance Specifications

- 1/2 to 25hp
- TENV or TEFC enclosures
- NEMA Frames 56C - 256TC
- Footless or Base Mounted
- Meets IP56 enclosure protection

Cross other manufacturer's models to WEG equivalents

HydroDuty™

New features that make it easier to clean.

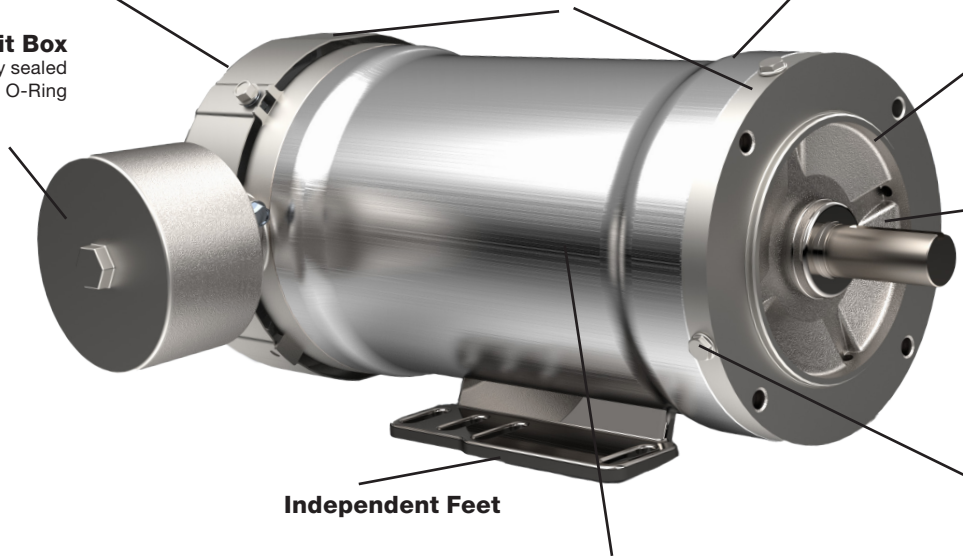

Longer Life Span

HydroDuty General features

- Available from 0.5HP up to 10 HP
- TENV or TEFC enclosures
- NEMA Frames 56C, 143/5TC, 182/4TC and 213/5TC
- Independent Feet
- Construction Safe for Food, Beverage and Pharmaceutical
- InverterDuty operation
- Protection Degree IP69K
- Internal Aegis Shaft Grounding ring available as factory build
- Voltage: 230/460/ @60hz 190/380V @50hz
- NEMA Premium design and IE3 compliant for 50hz
- Made in the US
- Colored Leads
- EZ connect available for 56C and 143/5TC
- Improved Welding Finish

** Patent Pending*

Encapsulated Washdown Motors

HydroDuty™ - Stainless Steel - TEFC - C-Face - Foot Mount

HP	kW	RPM	Frame	Model Number	List Price	Mult. Symbol	Approx. Shipping Weight (lbs)	Service Factor	FL Amps @ High	FL. Eff (%)	"C" Dimension Standard/ EZ Model	Voltage (V)	Notes
0.50	0.37	1800	56C	.5018ET3EHD56C	$1450	S3	43	1.00	1.02	73.5	13.88	230/460	1
		1200	56C	.5012ET3EHD56C	$1694	S3	44	1.15	1.35	66	13.88	230/460	
0.75	0.55	1800	56C	.7518ET3EHD56C	$1544	S3	43	1.15	1.47	75.5	13.88	230/460	
		900	56C	.7509ET3EHD56C	$1794	S3	59	1.00	2.35	70	15.63	230/460	1
1	0.75	3600	56C	00136ET3EHD56C	$1601	S3	43	1.15	1.57	77.0	13.88	230/460	
		1800	56C	00118ET3EHD56C	$1619	S3	54	1.15	1.55	85.5	15.63	230/460	
		1800	143TC	00118ET3EHD143TC	$1642	S3	55	1.15	1.55	85.5	15.69	230/460	
		1800	56C	00118ET3HHD56C	$1630	S3	53	1.15	1.28	85.5	15.63	575	
		1200	56C	00152ET3EHD56C	$1875	S3	53	1.15	1.78	82.5	14.63	230/460	
		1200	145TC	00112ET3EHD143TC	$1886	S3	53	1.15	1.78	82.5	14.69	230/460	
1.5	1.1	3600	56C	00156ET3EHD56C	$1658	S3	50	1.15	1.96	84.0	14.63	230/460	
		1800	145TC	00158ET3EHD145TC	$1706	S3	56	1.15	2.13	86.5	15.69	230/460	
		1800	56C	00158ET3EHD56C	$1683	S3	56	1.15	2.13	86.5	15.63	230/460	
2	1.5	3600	145TC	00236ET3EHD145TC	$1976	S3	53	1.15	2.59	85.5	14.69	230/460	
		3600	145TC	00236ET3HHD145TC	$1981	S3	52	1.15	2.07	85.5	14.69	575	
		3600	56C	00236ET3EHD56C	$1958	S3	53	1.15	2.59	85.5	14.63	230/460	
		1800	145TC	008ET3EHD143TC	$2005	S3	56	1.15	2.94	86.5	15.69	230/460	
		1800	145TC	008ET3HHD145TC	$2025	S3	58	1.15	2.32	86.5	15.69	575	
		1800	56C	008ET3EHD56C	$1981	S3	56	1.15	2.94	86.5	15.63	230/460	
		1800	56C	008ET3HHD56C	$1995	S3	58	1.15	2.32	86.5	15.63	575	
3	2.2	3600	145TC	00318ET3EHD143TC	$2300	S3	61	1.15	3.63	86.5	15.69	230/460	
		3600	56C	00336ET3EHD56C	$2290	S3	61	1.15	3.63	86.5	15.63	230/460	
		3600	182TC	00336ET3EHD182TC	$2915	S3	90	1.15	3.8	86.5	15.78	230/460	45
		1800	182TC	00318ET3EHD182TC	$2875	S3	85	1.15	3.9	89.5	15.78	230/460	45
5	3.7	3600	184TC	00536ET3EHD184TC	$3500	S3	103	1.15	6.2	88.5	15.78	230/460	45
		1800	184TC	00518ET3EHD184TC	$3305	S3	160	1.15	6.3	89.5	15.78	230/460	45
7.5	5.5	3600	5TC	00736ET3EHD3TC	$4151	S3	203	1.15	9.3	89.5	19.18	230/460	45
		1800	3TC	00718ET3EHD3TC	$4280	S3	173	1.15	9.6	91.7	19.18	230/460	45
10	7.5	3600	5TC	01036ET3EHD5TC	$4693	S3	3	1.15	11.8	90.2	19.18	230/460	45
		1800	5TC	01018ET3EHD5TC	$4968	S3	205	1.15	13.2	91.7	19.18	230/460	45

HydroDuty™ - Stainless Steel - TENV - C-Face - Foot Mount

HP	kW	RPM	Frame	EZ Connect Model Number	List Price	Mult. Symbol	Approx. Shipping Weight (lbs)	Service Factor	FL Amps @ High	FL. Eff (%)	"C" Dimension Standard/ EZ Model	Voltage (V)	Notes
0.5	0.37	3600	56C	.5036NT3EHD56C	$1435	S3	38	1.00	0.8	79.0	12.91	230/460	1
		1800	56C	.5018NT3EHD56C	$1455	S3	40	1.00	0.86	80.0	12.91	230/460	1
0.75	0.55	3600	56C	.7536NT3EHD56C	$1460	S3	41	1.15	1.12	81.0	12.91	230/460	
		1800	56C	.7518NT3EHD56C	$1483	S3	44	1.00	1.25	82.5	12.91	230/460	1
		1200	56C	.7512NT3EHD56C	$1795	S3	49	1.00	1.66	77	13.66	230/460	1
1	1.75	3600	56C	00136NT3HHD56C	$1635	S3	44	1.00	1.12	86.0	13.66	575	1
		3600	56C	00136NT3EHD56C	$1630	S3	42	1.15	1.38	85.0	13.66	230/460	
		1800	143TC	00118NT3EHD143TC	$1615	S3	54	1.00	1.55	85.5	14.72	230/460	1
		1800	56C	00118NT3EHD56C	$1591	S3	53	1.00	1.55	85.5	14.66	230/460	1
		1800	56C	00118NT3EHDLT56C	$1696	S3	54	1.00	1.55	85.5	14.66	230/460	1
		1800	56C	00118NT3HHD56C	$1610	S3	51	1.00	1.24	85.5	13.66	575	1

***Low temperature ratings*

All ratings are 208-230/460 40° C ambient Class F insulation

56 and 145 Frame models also rated 230/460 50HZ 1.0SF

[1] Regular terminal box
[2] EZ-Connect model is 56C frame.

Notes:
1) 1.0 service factor
45) Also rated 380V 50 Hz

Find the Right Drive for your HydroDuty™ Motor on page 8

Data subject to change without notice.

Encapsulated Washdown Motors

HydroDuty™ - Stainless Steel - TEFC - C-Face - Footless

HP	kW	RPM	Frame	EZ Connect Model Number	List Price	Mult. Symbol	Approx. Shipping Weight (lbs)	Service Factor	FL Amps @ High	FL. Eff (%)	"C" Dimension Standard/ EZ Model	Voltage (V)	Notes
0.75	0.55	1800	56C	.7518ET3EHD56CFL	**$1,526**	S3	42	1.15	1.47	75.5	13.88	230/460	
1	0.75	3600	56C	00136ET3EHD56CFL	**$1,581**	S3	42	1.15	1.57	77.0	13.88	230/460	
		1800	143TC	00118ET3EHDR143TC	**$1,626**	S3	53	1.15	1.55	85.5	15.69	230/460	
		1800	56C	00118ET3EHD56CFL	**$1,601**	S3	52	1.15	1.55	85.5	15.63	230/460	
1.5	1.1	1800	145TC	00158ET3EHDR145TC	**$1,688**	S3	55	1.15	2.13	86.5	15.69	230/460	
		1800	56C	00158ET3EHD56CFL	**$1,663**	S3	55	1.15	2.13	86.5	15.63	230/460	
2	1.5	1800	145TC	00218ET3EHDR143TC	**$1,985**	S3	55	1.15	2.94	86.5	15.69	230/460	
		1800	56C	00218ET3EHD56CFL	**$1,962**	S3	55	1.15	2.94	86.5	15.63	230/460	
3	2.2	1800	184TC	00318ET3EHDR184TC	**$2,805**	S3	112	1.15	4.3	89.5	17.2	230/460	
5	3.7	1800	184TC	00518ET3EHDR184TC	**$3,295**	S3	120	1.00	6.7	89.5	17.2	230/460	1

HydroDuty™ - Stainless Steel - TENV - C-Face - Footless

HP	kW	RPM	Frame	EZ Connect Model Number	List Price	Mult. Symbol	Approx. Shipping Weight (lbs)	Service Factor	FL Amps @ High	FL. Eff (%)	"C" Dimension Standard/ EZ Model	Voltage (V)	Notes
0.5	0.37	1800	56C	.5018NT3EHD56CFL	**$1,421**	S3	39	1.00	0.86	80.0	12.91	230/460	1
0.75	0.55	3600	56C	.7536NT3EHD56CFL	**$1,443**	S3	40	1.15	1.12	81.0	12.91	230/460	
		1800	56C	.7518NT3EHD56CFL	**$1,465**	S3	43	1.00	1.25	82.5	12.91	230/460	1
1	0.75	1800	56C	00118NT3EHD56CFL	$1,572	S3	52	1.00	1.55	85.5	14.68	230/460	1
		1800	143TC	00118NT3EHDR143TC	$1,595	S3	52	1.00	1.55	85.5	14.72	230/460	1
		1800	56C	00118NT3EHDLT56CFL	$1,676	S3	52	1.00	1.55	85.5	14.66	230/460	1
		1800	100L	00118NT3EHDR100L	$1,891	S3	53	1.00	1.55	85.5	14.94	230/460	1
		1200	56C	00112ET3EHD56CFL	$1,900	S3	59	1.00	2	82.5	14.66	230/460	1

All ratings are 208-230/460 40° C ambient Class F insulation

56 and 145 Frame models also rated 230/460, 50HZ, 1.0SF

[1] Regular terminal box

Notes:

1) 1.0 service factor

Find the Right Drive for your HydroDuty™ Motor on page 9

EZ-Connect Technology

Available on 56/140T frames

1. Ensure leads are connected for appropriate voltage per nameplate. Attach green ground lead to provided screw terminal.

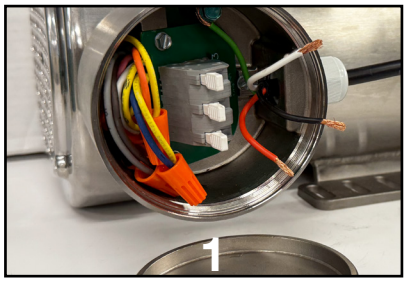

2. Feed incoming leads into appropriate termination (L1, L2, L3).

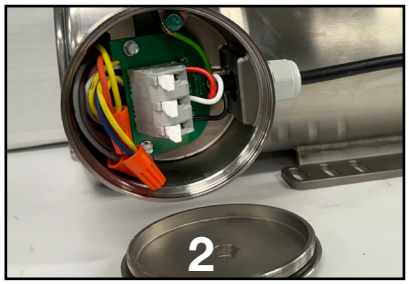

3. Close Terminal Levers and tighten waterproof cable gland or conduit connection.

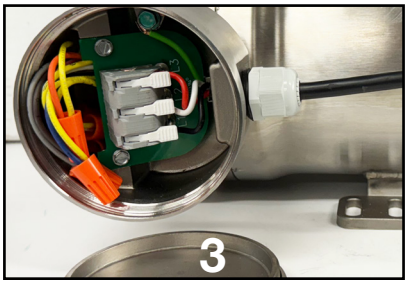

HydroDuty™ Motor and CFW500 Washdown Drive Quick Selection Quide

HydroDuty™ - Stainless Steel - TEFC - C-Face - Foot Mount

HP	RPM	Voltage (V)	Model Number	List Price	FL Eff. (%)	460V Drive [1]	Drive List Price	230V Drive [1]	Drive List Price
0.50	1800	230/460	.5018ET3EHD56C	**$1,450**	73.5	CFW500A02P6B2DB66G2	$800	CFW500A01P6T4DB66G2	$975.00
0.50	1200	230/460	.5012ET3EHD56C	**$1,694**	66	CFW500A04P3B2DB66G2	$850	CFW500A01P6T4DB66G2	$975.00
0.75	1800	230/460	.7518ET3EHD56C	**$1,544**	75.5	CFW500A04P3B2DB66G2	$850	CFW500A01P6T4DB66G2	$975.00
	900	230/460	.7509ET3EHD56C	**$1,794**	70	CFW500A07P3B2DB66G2	$1,015	CFW500A02P6T4DB66G2	$990.00
1	3600	230/460	00136ET3EHD56C	**$1,601**	77.0	CFW500A04P3B2DB66G2	$850	CFW500A01P6T4DB66G2	$975.00
	1800	230/460	00118ET3EHD56C	**$1,619**	85.5	CFW500A04P3B2DB66G2	$850	CFW500A01P6T4DB66G2	$975.00
	1800	230/460	00118ET3EHD143TC	**$1,642**	85.5	CFW500A04P3B2DB66G2	$850	CFW500A01P6T4DB66G2	$975.00
	1800	575	00118ET3HHD56C	**$1,630**	85.5	CFW500B01P7T5DB66 [2]	$1,590		
	1200	230/460	00152ET3EHD56C	**$1,875**	82.5	CFW500A04P3B2DB66G2	$850	CFW500A02P6T4DB66G2	$990.00
	1200	230/460	00112ET3EHD143TC	**$1,886**	82.5	CFW500A04P3B2DB66G2	$850	CFW500A02P6T4DB66G2	$990.00
1.5	3600	230/460	00156ET3EHD56C	**$1,658**	84.0	CFW500A04P3B2DB66G2	$850	CFW500A02P6T4DB66G2	$990.00
	1800	230/460	00158ET3EHD145TC	**$1,706**	86.5	CFW500A04P3B2DB66G2	$850	CFW500A02P6T4DB66G2	$990.00
	1800	230/460	00158ET3EHD56C	**$1,683**	86.5	CFW500A04P3B2DB66G2	$850	CFW500A02P6T4DB66G2	$990.00
2	3600	230/460	00236ET3EHD145TC	**$1,976**	85.5	CFW500A07P3B2DB66G2	$1,015	CFW500A02P6T4DB66G2	$990.00
	3600	575	00236ET3HHD145TC	**$1,981**	85.5	CFW500B03P0T5DB66 [2]	$1,670		
	3600	230/460	00236ET3EHD56C	**$1,958**	85.5	CFW500A07P3B2DB66G2	$1,015	CFW500A02P6T4DB66G2	$990.00
	1800	230/460	00218ET3EHD143TC	**$2,005**	86.5	CFW500A07P3B2DB66G2	$1,015	CFW500A04P3T4DB66G2	$1,175.00
	1800	575	00218ET3HHD145TC	**$2,025**	86.5	CFW500B03P0T5DB66 [2]	$1,670		
	1800	230/460	00218ET3EHD56C	**$1,981**	86.5	CFW500A07P3B2DB66G2	$1,015	CFW500A04P3T4DB66G2	$1,175.00
	1800	575	00218ET3HHD56C	**$1,995**	86.5	CFW500B03P0T5DB66 [2]	$1,670		
3	3600	230/460	00318ET3EHD143TC	**$2,300**	86.5	CFW500A07P3B2DB66G2	$1,015	CFW500A04P3T4DB66G2	$1,175.00
3	3600	230/460	00336ET3EHD56C	**$2,290**	86.5	CFW500A07P3B2DB66G2	$1,015	CFW500A04P3T4DB66G2	$1,175.00
3	3600	230/460	00336ET3EHD182TC	**$2,915**	86.5	CFW500A10P0B2DB66G2	$1,095	CFW500A04P3T4DB66G2	$1,175.00
3	1800	230/460	00318ET3EHD182TC	**$2,875**	89.5	CFW500A10P0B2DB66G2	$1,095	CFW500A04P3T4DB66G2	$1,175.00
5	3600	230/460	00536ET3EHD184TC	**$3,500**	88.5	CFW500A16P0T2DB66G2	$1,350	CFW500A06P5T4DB66G2	$1,400.00
5	1800	230/460	00518ET3EHD184TC	**$3,305**	89.5	CFW500A16P0T2DB66G2	$1,350	CFW500A06P5T4DB66G2	$1,400.00
7.5	3600	230/460	00736ET3EHD213TC	**$4,151**	89.5	CFW500B24P0T2DB66G2	$1,950	CFW500A10P0T4DB66G2	$1,650.00
7.5	1800	230/460	00718ET3EHD213TC	**$4,280**	91.7	CFW500B24P0T2DB66G2	$1,950	CFW500A10P0T4DB66G2	$1,650.00
10	3600	230/460	01036ET3EHD215TC	**$4,693**	90.2	CFW500B24P0T2DB66G2	$1,950	CFW500B14P0T4DB66G2	$2,050.00
10	1800	230/460	01018ET3EHD215TC	**$4,968**	91.7	CFW500B33P0T2DB66G2	$2,675	CFW500B14P0T4DB66G2	$2,050.00

HydroDuty™ - Stainless Steel - TENV - C-Face - Foot Mount

HP	RPM	Voltage (V)	EZ Connect Model Number	List Price	FL Eff. (%)	460V Drive [1]	Drive List Price	230V Drive [1]	Drive List Price
0.5	3600	230/460	.5036NT3EHD56C	**$1,435**	79.0	CFW500A01P6B2DB66G2	$775	CFW500A01P0T4DB66G2	$950
	1800	230/460	.5018NT3EHD56C	**$1,455**	80.0	CFW500A02P6B2DB66G2	$800	CFW500A01P0T4DB66G2	$950
0.75	3600	230/460	.7536NT3EHD56C	**$1,460**	81.0	CFW500A02P6B2DB66G2	$800	CFW500A01P6T4DB66G2	$975
	1800	230/460	.7518NT3EHD56C	**$1,483**	82.5	CFW500A02P6B2DB66G2	$800	CFW500A01P6T4DB66G2	$975
	1200	230/460	.7512NT3EHD56C	**$1,795**	77	CFW500A04P3B2DB66G2	$850	CFW500A02P6T4DB66G2	$990
1	3600	575	00136NT3HHD56C	**$1,635**	86.0	CFW500B01P7T5DB66 [2]	$1,590		
	3600	230/460	00136NT3EHD56C	**$1,630**	85.0	CFW500A04P3B2DB66G2	$850	CFW500A01P6T4DB66G2	$975
	1800	230/460	00118NT3EHD143TC	**$1,615**	85.5	CFW500A04P3B2DB66G2	$850	CFW500A01P6T4DB66G2	$975
	1800	230/460	00118NT3EHD56C	**$1,591**	85.5	CFW500A04P3B2DB66G2	$850	CFW500A01P6T4DB66G2	$975
	1800	230/460	00118NT3EHDLT56C	**$1,696**	85.5	CFW500A04P3B2DB66G2	$850	CFW500A01P6T4DB66G2	$975
	1800	575	00118NT3HHD56C	**$1,610**	85.5	CFW500B01P7T5DB66 [2]	$1,590		

Notes:

1) Drives selected to match motor FLA

2) 575V Drive

Drive Match

HydroDuty™ Motor and CFW500 Washdown Drive Quick Selection Quide

HydroDuty™ - Stainless Steel - TEFC - C-Face - Footless

HP	RPM	Voltage (V)	EZ Connect Model Number	List Price	FL Eff.(%)	460V Drive [1]	Drive List Price	230V Drive [1]	Drive List Price
0.75	1800	230/460	.7518ET3EHD56CFL	**$1,526**	75.5	CFW500A04P3B2DB66G2	$850	CFW500A01P6T4DB66G2	$975
1	3600	230/460	00136ET3EHD56CFL	**$1,581**	77.0	CFW500A04P3B2DB66G2	$850	CFW500A01P6T4DB66G2	$975
	1800	230/460	00118ET3EHDR143TC	**$1,626**	85.5	CFW500A04P3B2DB66G2	$850	CFW500A01P6T4DB66G2	$975
	1800	230/460	00118ET3EHD56CFL	**$1,601**	85.5	CFW500A04P3B2DB66G2	$850	CFW500A01P6T4DB66G2	$975
1.5	1800	230/460	00158ET3EHDR145TC	**$1,688**	86.5	CFW500A04P3B2DB66G2	$850	CFW500A02P6T4DB66G2	$990
	1800	230/460	00158ET3EHD56CFL	**$1,663**	86.5	CFW500A04P3B2DB66G2	$850	CFW500A02P6T4DB66G2	$990
2	1800	230/460	00218ET3EHDR143TC	**$1,985**	86.5	CFW500A07P3B2DB66G2	$1,015	CFW500A04P3T4DB66G2	$1,175
	1800	230/460	00218ET3EHD56CFL	**$1,962**	86.5	CFW500A07P3B2DB66G2	$1,015	CFW500A04P3T4DB66G2	$1,175
3	1800	230/460	00318ET3EHDR184TC	**$2,805**	89.5	CFW500A10P0B2DB66G2	$1,095	CFW500A04P3T4DB66G2	$1,175
5	1800	230/460	00518ET3EHDR184TC	**$3,295**	89.5	CFW500A16P0T2DB66G2	$1,350	CFW500A10P0T4DB66G2	$1,650

HydroDuty™ - Stainless Steel - TENV - C-Face - Footless

HP	RPM	Voltage (V)	EZ Connect Model Number	List Price	FL Eff.(%)	460V Drive [1]	Drive List Price	230V Drive [1]	Drive List Price
0.5	1800	230/460	.5018NT3EHD56CFL	**$1,421**	80.0	CFW500A02P6B2DB66G2	$800	CFW500A01P0T4DB66G2	$950
0.75	3600	230/460	.7536NT3EHD56CFL	**$1,443**	81.0	CFW500A02P6B2DB66G2	$800	CFW500A01P6T4DB66G2	$975
	1800	230/460	.7518NT3EHD56CFL	**$1,465**	82.5	CFW500A02P6B2DB66G2	$800	CFW500A01P6T4DB66G2	$975
1	1800	230/460	00118NT3EHD56CFL	$1,572	85.5	CFW500A04P3B2DB66G2	$850	CFW500A01P6T4DB66G2	$975
	1800	230/460	00118NT3EHDR143TC	$1,595	85.5	CFW500A04P3B2DB66G2	$850	CFW500A01P6T4DB66G2	$975
	1800	230/460	00118NT3EHDLT56CFL	$1,676	85.5	CFW500A04P3B2DB66G2	$850	CFW500A01P6T4DB66G2	$975
	1800	230/460	00118NT3EHDR100L	$1,891	85.5	CFW500A04P3B2DB66G2	$850	CFW500A01P6T4DB66G2	$975
	1200	230/460	00112ET3EHD56CFL	$1,900	82.5	CFW500A04P3B2DB66G2	$850	CFW500A02P6T4DB66G2	$990

Notes:

1) Drives selected to match motor FLA

PickerPlus™

The **Picker Plus** outperforms any other feather picker motor in the poultry industry, with its oversized double row drive end bearings, encapsulated windings, as well as its patented breather vent.

You Can Trust WEG for the Toughest - Longest Lasting Motor for Feather Picking Applications

Built to last in the harshest environments

- **Durable**—Withstands frequent sanitizing with high pressure sprays and extreme side loading requirements typical of feather pickers
- **Economical**—Outperforms any other motor on the market, and onemotor change can cost over $15,000 in downtime*

C-Face - Foot Mount

HP	RPM	Frame	Catalog Number	List Price	Multi.	Base	Enclosure	HZ	SF	FL Amps	C Dim	KVA Code	Appr. Ship Wt (lbs.)
3	1725	145TC	1311017192	**$1,736**	S3	Y	TEFC	60	1.00	8.80/4.40	15.560	J	68
	1725	100L-B14	1311017196	**$1,852**	S3	Y	TEFC	60	1.00	8.80/4.40	15.780	J	68

C-Face - Footless

HP	RPM	Frame	Catalog Number	List Price	Multi.	Base	Enclosure	HZ	SF	FL Amps	C Dim	KVA Code	Appr. Ship Wt (lbs.)
3	1725	100L-B14	1311017195	**$1,803**	S3	N	TEFC	60	1.00	8.80/4.40	15.780	J	66
	1725	100L-B5	1311017191	**$1,820**	S3	N	TEFC	60	1.00	8.80/4.40	16.180	J	71

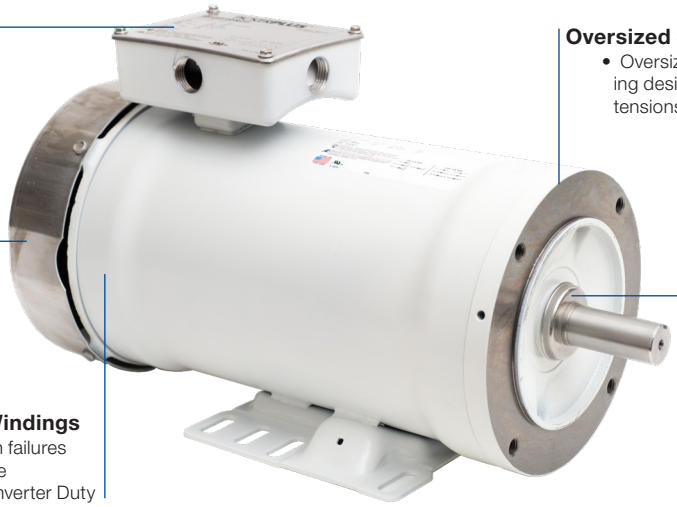

Sealed Top Mounted Conduit Box
- Prevents water accumulation at the leads
- Reduces risk of lead wire failure with watertight heat shrink lead splice kit
- Potted conduit lead wire entrance

Advanced Protection Technology
- Eliminates the need for drain plugs with an oil and water resistant breather vent and flared shell design

SprayGuard Encapsulated Windings
- Eliminate common washdown failures
- Protect windings from moisture
- Meet NEMA MG1 Part 31 for Inverter Duty

Oversized Shaft End Bearings
- Oversized double row drive end bearing designed to handle high side load tensions

Patented Three Stage Seal System
- Ensures watertight fit with custom lip seal, stainless steel shaft slinger and specially designed check seal

Shark™

The WEG Shark Stainless Steel Motor is designed to meet the most demanding sanitary requirements through its hygienic, smooth, and rounded construction, which avoids dirt accumulation and simplifies cleaning. Its special feet design prevents residue buildup and enhances cleaning efficiency, while offering 360-degree rotation for flexible installation. The motor features a robust sealing system that includes a stainless steel slinger, O-rings, seals, and double-sealed bearings to protect against moisture and contaminants. Additionally, the internally painted stator and rotor provide added resistance to corrosion, extending motor life and ensuring maximum reliability in harsh, washdown-intensive environments.

Designed for variable frequency drive operation with enhanced wire spike resistance for long-term reliability. Available with Class H insulation for high-temperature endurance and optional shaft grounding ring to protect bearings.

Standard Features

- Output: 0.33 HP to 30 HP
- Frames: 56C up to 286TC
- Number of poles: 2 up to 6
- Certifications: CSA/UL/CE
- Efficiency: NEMA Premium @ 60hz and IE3 for 50hz
- Voltage: 230/460//190-220/380-415
- Service Factor: 1.15
- Mounting: F1 (Footless and Foot Mount)
- Flange: C-Face
- Enclosures: TEFC and TENV
- Insulation Class: F (Class H available under request)
- Degree of protection: IP66
- Duty: Continuous
- Shaft: Stainless Steel 300 Series
- Impregnated windings (non-encapsulated)

Unique Standard Features

- 360 degrees rotatable terminal box
- Welded Terminal Box
- Independent Feet
- Four T-drains in each endplate
- O'rings in end shields
- Made in North America
- Polished stainless steel finish
- Colored Leads
- Water tight cable gland included
- Suitable for inverter use per NEMA MG1 Part 31.4.4.2
- Lifting provisions 182/4TC - 284/6TC frame

Optional

- SGR shaft grounding ring
- Class H

Shark™

Shark™ - Stainless Steel - TEFC & TENV - C-Face - Foot Mount

HP	kW	RPM	Frame	Catalog Number	List Price	Mult. Symbol	Approx. Shipping Weight (lbs)	Enclosure	Service Factor	FL Amps @ High	FL. Eff (%)	"C" Dimension (in)	Voltage (V)	Notes
0.33	0.25	3600	56C	.3336NP3ESS56C-S	$725	S1	28.28	TENV	1.15	0.58	72	10.886	230/460	17; 21
		1800	56C	.3318NP3ESS56C-S	$726	S1	30.34	TENV	1.15	0.744	74	10.886	230/460	17; 21
0.5	0.37	1200	56C	.5012NP3ESS56C-S	$819	S1	38.65	TENV	1.15	0.976	75.5	11.28	230/460	17; 21
		1800	56C	.5018NP3ESS56C-S	$753	S1	34.56	TENV	1.15	0.986	78.5	10.886	260/460	17; 21
		3600	56C	.5036NP3ESS56C-S	$719	S1	29.77	TENV	1.15	0.765	74	10.886	230/460	17; 21
0.75	0.55	1200	56C	.7512NP3ESS56C-S	$921	S1	42.7	TENV	1.15	1.3	81.5	11.28	230/460	17; 21
		1800	56C	.7518NP3ESS56C-S	$865	S1	37.36	TENV	1.15	1.3	81.5	10.886	230/460	17; 21
		3600	56C	.7536NP3ESS56C-S	$746	S1	32.48	TENV	1.15	1.13	77	10.886	230/460	17; 21
1	0.75	1800	143TC	00118ET3ESS143TC-S	$1,117	S1	49.19	TEFC	1.15	1.47	85.5	13.925	230/460	21
		1200	143TC	00112ET3ESS145TC-S	$1,182	S1	49.76	TEFC	1.15	1.58	82.5	13.925	230/460	21
		1800	143TC	00118NT3ESS143TC-S	$1,100	S1	48.32	TENV	1.15	1.47	85.5	12.134	230/460	17; 21
		1800	56C	00118ET3ESS56C-S	$1,055	S1	45.96	TEFC	1.15	1.47	85.5	13.858	230/460	21
		1200	56C	00112ET3ESS56C-S	$1,135	S1	46.99	TEFC	1.15	1.58	82.5	13.465	230/460	21
		3600	56C	00136ET3HSS56C-S	$956	S1	34.5	TEFC	1.15	1.15	78.5	13.465	575	21
		3600	56C	00136ET3ESS56C-S	$944	S1	34.69	TEFC	1.15	1.44	78.5	13.465	230/460	21
		1800	56C	00118NT3ESS56C-S	$1,000	S1	47.32	TENV	1.15	1.47	85.5	12.067	230/460	17; 21
		3600	56C	00136NT3ESS56C-S	$968	S1	39.19	TENV	1.15	1.42	77	11.673	230/460	17; 21
		3600	56C	00136NT3HSS56C-S	$972	S1	39.01	TENV	1.15	1.14	77	11.673	575	17; 21
		1800	56C	00118NT3HSS56C-S	$936	S1	47.12	TENV	1.15	1.18	85.5	12.067	575	17; 21
1.5	1.1	1800	143TC	00158ET3ESS145TC-S	$1,172	S1	49.43	TEFC	1.15	2.02	86.5	13.925	230/460	21
		1800	56C	00158ET3ESS56C-S	$1,114	S1	48.37	TEFC	1.15	2.02	86.5	13.858	230/460	21
		3600	56C	00156ET3ESS56C-S	$1,097	S1	42.79	TEFC	1.15	1.87	84	13.465	230/460	21
2	1.5	1800	145TC	00218ET3ESS145TC-S	$1,391	S1	53.87	TEFC	1.15	2.72	86.5	13.925	230/460	21
		3600	145TC	00236ET3ESS145TC-S	$1,354	S1	51.07	TEFC	1.15	2.47	85.5	13.925	230/460	21
		3600	56C	00236ET3ESS56C-S	$1,238	S1	50.2	TEFC	1.15	2.47	85.5	13.858	230/460	21
		1800	56C	00218ET3ESS56C-S	$1,249	S1	52.66	TEFC	1.15	2.72	86.5	13.858	230/460	21
		1800	56C	00218ET3HSS56C-S	$1,241	S1	52.622	TEFC	1.15	2.18	86.5	13.858	575	21
		3600	56C	00236ET3HSS56C-S	$1,215	S1	50.05	TEFC	1.15	1.98	85.5	13.858	575	21
3	2.2	3600	182TC	00336ET3HSS182TC-S	$2,140	S1	72.39	TEFC	1.15	3.01	86.5	15.512	575	21
		1800	182TC	00318ET3HSS182TC-S	$2,080	S1	96.58	TEFC	1.15	3.05	89.5	17.878	575	21
		1800	182TC	00318ET3ESS182TC-S	$2,076	S1	96.66	TEFC	1.15	3.81	89.5	17.878	230/460	21
		3600	182TC	00336ET3ESS182TC-S	$2,114	S1	72.33	TEFC	1.15	3.76	86.5	15.512	230/460	21
5	3.7	1800	184TC	00518ET3ESS184TC-S	$2,366	S1	100.84	TEFC	1.15	6.49	89.5	17.878	230/460	21
		3600	184TC	00536ET3ESS184TC-S	$2,438	S1	89.14	TEFC	1.15	5.9	88.5	16.697	230/460	21
		3600	184TC	00536ET3HSS184TC-S	$2,438	S1	88.91	TEFC	1.15	4.75	88.5	16.697	575	21
		1800	184TC	00518ET3HSS184TC-S	$2,366	S1	100.64	TEFC	1.15	5.19	89.5	17.878	575	21
7.5	5.5	1800	213TC	00718ET3ESS213TC-S	$3,425	S1	163.57	TEFC	1.15	8.96	91.7	20.079	230/460	21
		3600	213TC	00736ET3ESS213TC-S	$3,582	S1	136.09	TEFC	1.15	8.87	89.5	19.291	230/460	21
		3600	213TC	00736ET3HSS213TC-S	$3,584	S1	135.83	TEFC	1.15	7.1	89.5	19.291	575	21
		1800	213TC	00718ET3HSS213TC-S	$3,430	S1	162.8	TEFC	1.15	7.17	91.7	20.079	575	21
10	7.5	3600	213TC	01036ET3ESS213TC-S	$3,837	S1	154.63	TEFC	1.15	11.9	90.2	20.079	230/460	21
		1800	213TC	01018ET3ESS213TC-S	$3,693	S1	180.16	TEFC	1.15	12.1	91.7	21.654	230/460	21
		1800	213TC	01018ET3HSS213TC-S	$3,698	S1	179.58	TEFC	1.15	9.66	91.7	21.654	575	21
15	11	1800	254TC	01518ET3ESS254TC-S	$6,344	S1	258.19	TEFC	1.15	18.2	92.4	23.378	230/460	21
		3600	254TC	01536ET3ESS254TC-S	$6,355	S1	233.29	TEFC	1.15	17.4	91	23.378	230/460	21
		3600	213TC	01536ET3ESS215TC-S	$5,665	S1	154	TEFC	1.15	17	91	21.654	230/460	21
20	15	1800	256TC	02018ET3ESS256TC-S	$6,975	S1	286.36	TEFC	1.15	24.7	93	23.378	230/460	21
		3600	256TC	02036ET3ESS256TC-S	$7,050	S1	261.03	TEFC	1.15	22.7	91	23.378	230/460	21
25	19	1800	284TC	02518ET3ESS284TC	$7,905	S1	390	TEFC	1	29.08	93.6	26.8	230/460	21
		3600	284TSC	02536ET3ESS284TC	$8,435	S1	370	TEFC	1	28.68	91.7	26.8	230/460	21
		3600	256TC	02536ET3ESS256TC-S	$7,877	S1	220	TEFC	1.15	28.5	91.7	23.378	230/460	21
30	22	1800	286TC	03018ET3ESS286TC	$8,364	S1	417	TEFC	1	34.9	93.6	27.8	230/460	21
		3600	286TSC	03036ET3ESS286TC	$8,816	S1	410	TEFC	1	34.42	34.42	27.8	230/460	21

Shark™

Shark™ - Stainless Steel - TEFC & TENV - C-Face - Footless

HP	kW	RPM	Frame	Catalog Number	List Price	Mult. Symbol	Enclosure	Approx. Shipping Weight (lbs)	Service Factor	FL Amps @ High	FL. Eff (%)	"C" Dimension (in)	Voltage (V)	Notes
0.33	0.25	1800	56C	.3318NP3ESS56CFL-S	$718	S1	30.18	TENV	1.15	0.744	74.0	10.886	230/460	17; 21
0.5	0.37	1200	56C	.5012NP3ESS56CFL-S	$814	S1	38.5	TENV	1.15	0.976	75.5	11.28	230/460	17; 21
		1800	56C	.5018NP3ESS56CFL-S	$738	S1	34.4	TENV	1.15	0.986	78.5	10.886	230/460	17; 21
		3600	56C	.5036NP3ESS56CFL-S	$712	S1	29.61	TENV	1.15	0.765	74.0	10.886	230/460	17; 21
0.75	0.55	1800	56C	.7518NP3ESS56CFL-S	$842	S1	37.2	TENV	1.15	1.3	81.5	10.886	230/460	17; 21
		1200	56C	.7512NP3ESS56CFL-S	$922	S1	45.55	TENV	1.15	1.3	81.5	11.28	230/460	17; 21
		3600	56C	.7536NP3ESS56CFL-S	$741	S1	32.32	TENV	1.15	1.13	77.0	10.886	230/460	17; 21
1	0.75	1800	143TC	00118ET3ESSR143TC-S	$1,108	S1	48.66	TEFC	1.15	1.47	85.5	13.925	230/460	21
		1800	143TC	00118NT3ESSR143TC-S	$1,092	S1	47.79	TENV	1.15	1.47	85.5	12.134	230/460	17; 21
		1800	56C	00118ET3ESS56CFL-S	$1,049	S1	47.211	TEFC	1.15	1.47	85.5	13.858	230/460	21
		3600	56C	00136ET3ESS56CFL-S	$937	S1	33.55	TEFC	1.15	1.44	78.5	13.465	230/460	21
		3600	56C	00136NT3ESS56CFL-S	$958	S1	38.22	TENV	1.15	1.42	77.0	11.673	230/460	17; 21
		1800	56C	00118NT3ESS56CFL-S	$933	S1	46.35	TENV	1.15	1.47	85.5	12.067	230/460	17; 21
		1800	56C	00118NT3HSS56CFL-S	$942	S1	45.15	TENV	1.15	1.18	85.5	12.067	575	17; 21
1.5	1.1	3600	143TC	00156ET3ESSR143TC-S	$1,186	S1	45.28	TEFC	1.15	1.87	84.0	13.925	230/460	21
		1800	145TC	00158ET3ESSR145TC-S	$1,132	S1	48.9	TEFC	1.15	2.02	86.5	13.925	230/460	21
		1800	56C	00158ET3HSS56CFL-S	$1,106	S1	47.14	TEFC	1.15	1.62	86.5	13.858	575	21
		1800	56C	00158ET3ESS56CFL-S	$1,097	S1	47.39	TEFC	1.15	2.02	86.5	13.858	230/460	21
		3600	56C	00156ET3ESS56CFL-S	$1,083	S1	41.82	TEFC	1.15	1.87	84.0	13.465	230/460	21
2	1.5	1800	145TC	00218ET3ESSR145TC-S	$1,335	S1	53.34	TEFC	1.15	2.72	86.5	13.925	230/460	21
		3600	145TC	00236ET3ESSR145TC-S	$1,354	S1	50.54	TEFC	1.15	2.47	85.5	13.925	230/460	21
		1800	56C	00218ET3HSS56CFL-S	$1,229	S1	51.65	TEFC	1.15	2.18	86.5	13.858	575	21
		1800	56C	00218ET3ESS56CFL-S	$1,228	S1	51.69	TEFC	1.15	2.72	86.5	13.858	230/460	21
		3600	56C	00236ET3ESS56CFL-S	$1,208	S1	49.23	TEFC	1.15	2.47	85.5	13.858	230/460	21
		3600	56C	00236ET3HSS56CFL-S	$1,215	S1	49.08	TEFC	1.15	1.98	85.5	13.858	575	21
3	2.2	3600	145TC	00336ET3ESSR145TC-S	$1,971	S1	50.54	TEFC	1.15	3.51	86.5	11.169	230/460	21
		1800	182TC	00318ET3ESSR182TC-S	$2,069	S1	94.5	TEFC	1.15	3.81	89.5	17.874	230/460	21
		3600	182TC	00336ET3ESSR182TC-S	$2,094	S1	70.17	TEFC	1.15	3.76	86.5	15.512	230/460	21
5	3.7	1800	184TC	00518ET3ESSR184TC-S	$2,349	S1	98.68	TEFC	1.15	6.49	89.5	17.874	230/460	21
		3600	184TC	00536ET3ESSR184TC-S	$2,421	S1	86.97	TEFC	1.15	5.9	88.5	16.693	230/460	21
7.5	5.5	1800	213TC	00718ET3ESSR213TC-S	$3,402	S1	160.97	TEFC	1.15	8.96	91.7	20.079	230/460	21
		3600	213TC	00736ET3ESSR213TC-S	$3,561	S1	133.49	TEFC	1.15	8.87	89.5	19.291	230/460	21
10	7.5	1800	213TC	01018ET3ESSR215TC-S	$3,688	S1	177.56	TEFC	1.15	12.1	91.7	21.654	230/460	21
		3600	215TC	01036ET3ESSR215TC-S	$3,823	S1	152.03	TEFC	1.15	11.9	90.2	20.079	230/460	21

W01 Shark™ - Stainless Steel - TEFC & TENV - C Face - Foot Mount - AEGIS

HP	kW	RPM	Frame	Catalog Number	List Price	Mult. Symbol	Approx. Shipping Weight (Lbs)	Enclosure	Service Factor	FL Amps @ high	FL. Eff (%)	"C" Dimension (in)	Voltage (V)	Notes
1	0.75	1800	56C	00118NT3HSS56C-SG	$1,145	S1	47.38	TENV	1.15	1.47	85.5	12.067	230/460	17; 21
2	1.5	1800	56C	00218ET3HSS56C-SG	$1,394	S1	52.72	TEFC	1.15	2.72	86.5	13.858	230/460	21
3	2.2	1800	182TC	00318ET3HSS182TC-SG	$2,221	S1	96.73	TEFC	1.15	3.81	89.5	17.878	230/460	21
5	3.7	1800	184TC	00518ET3HSS184TC-SG	$2,511	S1	100.91	TEFC	1.15	6.49	89.5	17.878	230/460	21
7.5	5.5	1800	213TC	00718ET3HSS213TC-SG	$3,570	S1	163.64	TEFC	1.15	8.96	91.7	20.079	230/460	21
10	7.5	1800	213TC	01018ET3HSS213TC-SG	$3,838	S1	180.18	TEFC	1.15	12.1	91.7	21.654	230/460	21

HydroWash™

The Washdown line was designed to meet the requirements of industries where there is a constant need for hygiene and cleanliness of the environment through high pressure water jets and/or chemical products. Washdown motors are applied in food, beverage and pharmaceutical industries.

Standard Features

- Output: 1/2 up to 25 HP
- Frames: 56 up to 254/6T
- 1200 - 3600 rpm
- Certification CSA/UL
- Efficiency: NEMA Premium
- Service factor: 1.15
- Mounting: F-1
- Insulation class “F” (ΔT 80 K)
- Degree of protection: IP56
- Shaft material: Stainless Steel (AISI 304)
- Bearing type: Shielded (2RS)
- Permatex on joints
- Color: Porcelain White - Munsell N 9.5
- Internal painting
- Breather on non drive endshield
- Drive end bearing seal: Oil seal with stainless steel spring and 304 stainless steel high pressure external shaft slinger
- Non drive end bearing seal: Oil seal with stainless steel spring

Factory Options

- Other mountings (F2, F3)
- Voltage: 575 V with 6 leads
- Space heaters
- Thermal protection
- Cable glands
- Threaded center hole (shaft)
- SGR shaft grounding ring (Inverter use)
- Shaft material: Stainless Steel (AISI 316)
- Dripcover

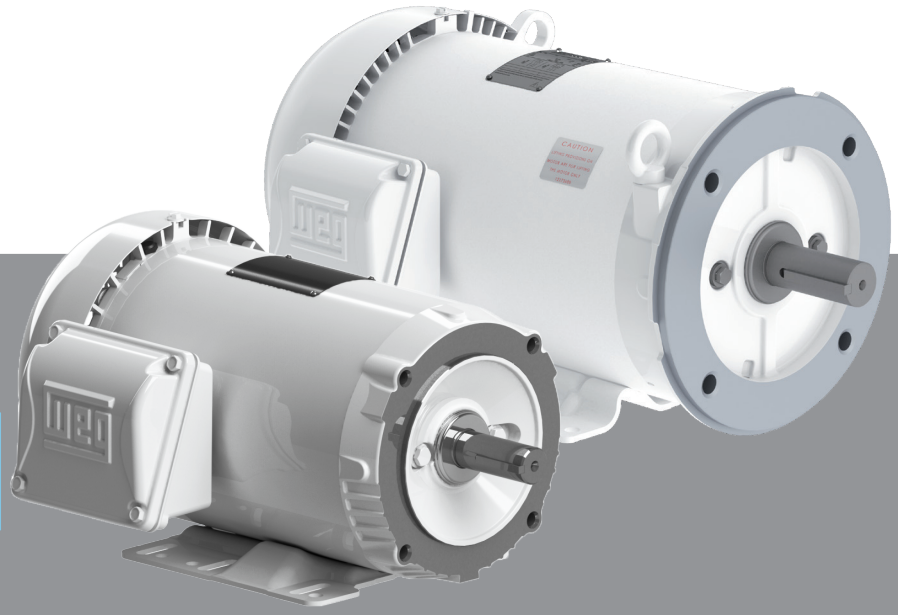

Superior Products - Superior Parts

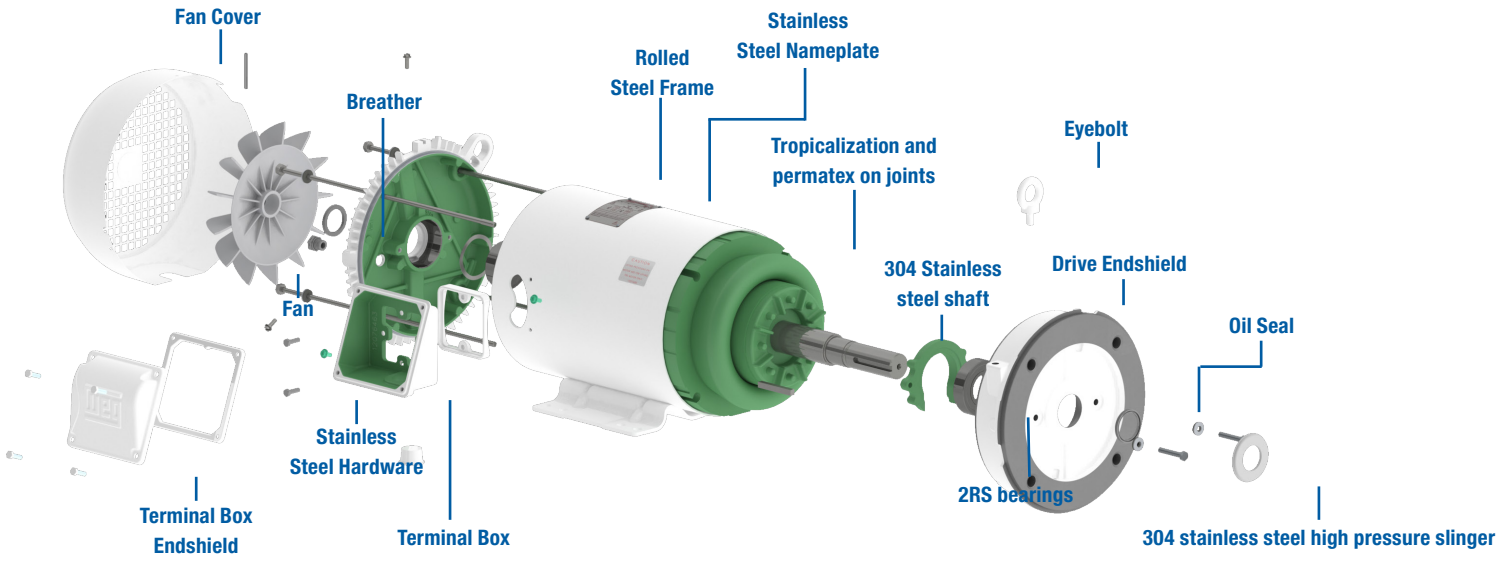

HydroWash™

Find the **Drive Match** for your **HydroWash™** Motor on page 20

C-Face Foot Mount

HP	RPM	Frame	Catalog Number	List Price	Multi.	Enclosure	SF	Voltage	FL Amps @ high	C Dim	kVA Code	Appr. Ship. Wt (lbs)
0.5	3600	56C	.5036NT3EHW56C-S	$560	S2	TENV	1.15	230/460	0.8	9.646	N	23
	1800	56C	.5018NT3EHW56C-S	$615	S2	TENV	1.15	230/460	1.0	10.433	P	28
0.75	3600	56C	.7536NT3EHW56C-S	$630	S2	TENV	1.15	230/460	1.1	10.039	N	26
	1800	56C	.7518NT3EHW56C-S	$675	S2	TENV	1.15	230/460	1.3	10.827	N	31
	1200	56C	.7512ET3EHW56C-S	$725	S2	TEFC	1.15	230/460	1.3	13.113	K	36
1	3600	56C	00136NT3EHW56C-S	$735	S2	TENV	1.15	230/460	1.4	10.682	N	32
	3600	143/5TC	00136NT3EHW143TC-S	$758	S2	TENV	1.15	230/460	1.4	11.541	N	32
	1800	143/5TC	00118NT3EHW143TC-S	$834	S2	TENV	1.15	230/460	1.5	11.541	M	38
	1800	143/5TC	00118NT3HHW143TC-S	$834	S2	TENV	1.15	575	1.2	11.541	M	38
	1800	56C	00118NT3EHW56C-S	$805	S2	TENV	1.15	230/460	1.5	11.614	M	38
	1200	56C	00112NT3EHW56C-S	$898	S2	TENV	1.15	230/460	1.8	12.008	L	42
1.5	3600	56C	00156NT3EHW56C-S	$749	S2	TENV	1.15	230/460	1.9	11.863	M	39
	3600	143/5TC	00156NT3EHW145TC-S	$768	S2	TENV	1.15	230/460	1.9	11.541	M	39
	1800	56C	00158ET3EHW56C-S	$833	S2	TEFC	1.15	230/460	2.0	13.113	K	38
	1800	143/5TC	00158NT3EHW145TC-S	$853	S2	TENV	1.15	230/460	1.5	11.541	L	42
	1800	143/5TC	00158NT3HHW145TC-S	$853	S2	TENV	1.15	575	1.8	11.541	L	42
2	3600	143/5TC	00236ET3EHW145TC-S	$870	S2	TEFC	1.15	230/460	2.7	13.976	K	43
	3600	56C	00236ET3EHW56C-S	$850	S2	TEFC	1.15	230/460	2.5	13.113	L	40
	1800	143/5TC	00218ET3EHW145TC-S	$950	S2	TEFC	1.15	230/460	2.7	13.976	K	43
	1800	56C	00218ET3EHW56C-S	$944	S2	TEFC	1.15	230/460	2.7	13.906	K	42
	1800	143/5TC	00218ET3HHW145TC-S	$950	S2	TEFC	1.15	575	2.2	13.976	K	42
	1200	182/4TC	00212ET3EHW184TC-S	$1,410	S2	TEFC	1.15	230/460	3 .0	17 .126	K	91
3	3600	143/5TC	00336ET3EHW145TC-S	$975	S2	TEFC	1.15	230/460	3.5	15.157	K	48
	3600	182/4TC	00336ET3EHW182TC-S	$1,409	S2	TEFC	1.15	230/460	3 .7	16 .339	K	77
	1800	182/4TC	00318ET3EHW182TC-S	$1,380	S2	TEFC	1.15	230/460	3 .8	17 .913	K	94
	1200	213/5TC	00312ET3EHW213TC-S	$1,850	S2	TEFC	1.15	230/460	4 .2	19 .291	H	144
5	3600	182/4TC	00536ET3EHW184TC-S	$1,700	S2	TEFC	1.15	230/460	5 .9	17 .913	J	92
	1800	182/4TC	00518ET3EHW184TC-S	$1,728	S2	TEFC	1.15	230/460	6 .5	17 .913	J	88

continued on next page

C-Face Foot Mount, *continued*

HP	RPM	Frame	Catalog Number	List Price	Multi.	Enclosure	SF	Voltage	FL Amps @ high	C Dim	kVA Code	Appr. Ship. Wt (lbs)
7.5	3600	182/4TC	00736ET3EHW184TC-S	$2,082	S2	TEFC	1.15	230/460	8.6	17.126	H	96
	3600	213/5TC	00736ET3EHW213TC-S	$2,214	S2	TEFC	1.15	230/460	8.7	20.079	H	145
	1800	213/5TC	00718ET3EHW213TC-S	$2,230	S2	TEFC	1.15	230/460	9.1	18.898	H	136
	1200	254/6TC	00712ET3EHW254TC-S	$3,795	S2	TEFC	1.15	230/460	10.0	22.559	G	239
10	3600	213/5TC	01036ET3EHW215TC-S	$2,650	S2	TEFC	1.15	230/460	11.5	21.654	H	175
	1800	213/5TC	01018ET3EHW215TC-S	$2,568	S2	TEFC	1.15	230/460	12.2	19.291	H	147
	1200	254/6TC	01012ET3EHW256TC-S	$4,345	S2	TEFC	1.15	230/460	13.8	23.346	G	269
15	3600	213/5TC	01536ET3EHW215TC-S	$3,250	S2	TEFC	1.15	230/460	17.0	21.654	J	171
	3600	254/6TC	01536ET3EHW254TC-S	$4,859	S2	TEFC	1.15	230/460	17.4	22.559	G	210
	1800	254/6TC	01518ET3EHW254TC-S	$4,826	S2	TEFC	1.15	230/460	18.2	22.559	G	242
20	3600	254/6TC	02036ET3EHW256TC-S	$5,772	S2	TEFC	1.15	230/460	22.7	23.346	G	248
	1800	254/6TC	02018ET3EHW256TC-S	$5,830	S2	TEFC	1.15	230/460	24.7	23.346	H	271
25	3600	254/6TC	02536ET3EHW256TC-S	$6,887	S2	TEFC	1.15	230/460	28.5	23.346	J	258

HydroWash™

Find the **Drive Match** for your **HydroWash™** Motor on page 21

C-Face Footless

HP	RPM	Frame	Catalog Number	List Price	Multi.	Enclosure	SF	Voltage	FL Amps @ high	C Dim	kVA Code	Appr. Ship. Wt (lbs)
0.5	1800	56C	.5018NT3EHW56CFL-S	$608	S2	TENV	1.15	230/460	1.0	10.288	P	28
0.75	1800	56C	.7518NT3EHW56CFL-S	$678	S2	TENV	1.15	230/460	1.3	10.682	N	31
1	1800	56C	00118NT3EHW56CFL-S	$803	S2	TENV	1.15	230/460	1.5	11.469	M	38
	1800	143TC	00118NT3EHWR143TC-S	$816	S2	TENV	1.15	230/460	1.5	11.614	M	38
1.5	1800	56C	00158ET3EHW56CFL-S	$865	S2	TEFC	1.15	230/460	2.0	13.503	K	38
	1800	145TC	00158ET3EHWR145TC-S	$888	S2	TEFC	1.15	230/460	1.1	13.582	K	38
2	1800	56C	00218ET3EHW56CFL-S	$971	S2	TEFC	1.15	230/460	2.7	13.897	K	42
	1800	145TC	00218ET3EHWR145TC-S	$978	S2	TEFC	1.15	230/460	2.7	13.976	K	42
3	3600	56C	00336NT3HHWR145TC-S	$894	S2	TENV	1.15	575	3.2	13.438	R	43
	3600	56C	00336NT3EHWR145TC-S	$894	S2	TENV	1.15	230/460	4.0	13.438	R	43
	1800	182/4TC	00318ET3EHWR182TC-S	$1,259	S2	TEFC	1.15	230/460	3.81	17.913	K	94
5	3600	182/4TC	00536ET3EHWR182TC-S	$1,600	S2	TEFC	1.15	230/460	5.90	17.913	J	92
	1800	182/4TC	00518ET3EHWR184TC-S	$1,592	S2	TEFC	1.15	230/460	6.49	17.913	J	87
7.5	3600	213/5TC	00736ET3EHWR213TC-S	$2,010	S2	TEFC	1.15	230/460	8.67	20.079	H	151
	1800	213/5TC	00718ET3EHWR213TC-S	$2,011	S2	TEFC	1.15	230/460	9.07	18.898	H	137
10	3600	213/5TC	01036ET3EHWR215TC-S	$2,442	S2	TEFC	1.15	230/460	11.50	21.654	H	180
	3600	213/5TC	01018ET3EHWR215TC-S	$2,394	S2	TEFC	1.15	230/460	12.20	19.291	H	147
15	3600	213/5TC	01536ET3EHWR215TC-S	$3,052	S2	TEFC	1.15	230/460	17.00	21.654	J	176

www.weg.net

HydroWash™

JM - White Epoxy - TEFC - C-Face, Foot Mount, IP56

HP	kW	RPM	Frame	Catalog Number	List Price	Mult. Symbol	Enclosure	HZ	SF	FL Amps @ high	"C" Dimension (in)	kVA Code	Appr. Ship. Wt (lbs)
1	0.75	1800	143/5JM	00118ET3EHW143JM-S	$988	S2	TEFC	60	1.15	1.47	16.25	M	37.9
1.5	1.12	3600	143/5JM	00156ET3EHW143JM-S	$1,005	S2	TEFC	60	1.15	1.87	15.86	L	34.2
	1.12	1800	143/5JM	00158ET3EHW145JM-S	$1,016	S2	TEFC	60	1.15	2.02	16.25	K	37.9
2	1.49	3600	143/5JM	00236ET3EHW145JM-S	$1,039	S2	TEFC	60	1.15	2.47	16.65	L	40.1
	1.49	1800	143/5JM	00218ET3EHW145JM-S	$1,124	S2	TEFC	60	1.15	2.72	16.65	K	42.3
3	2.24	3600	182/4JM	00336ET3EHW182JM-S	$1,662	S2	TEFC	60	1.15	3.76	17.03	K	63.5
	2.24	1800	182/4JM	00318ET3EHW182JM-S	$1,825	S2	TEFC	60	1.15	3.81	19.39	K	80.3
5	3.73	3600	182/4JM	00536ET3EHW184JM-S	$2,015	S2	TEFC	60	1.15	4.4	18.21	J	78.5
	3.73	1800	182/4JM	00518ET3EHW184JM-S	$2,197	S2	TEFC	60	1.15	6.49	19.39	J	71.4
7.5	5.59	3600	213/5JM	00736ET3EHW213JM-S	$2,653	S2	TEFC	60	1.15	8.87	20.02	J	133
	5.59	1800	213/5JM	00718ET3EHW213JM-S	$2,801	S2	TEFC	60	1.15	8.96	20.02	H	120
10	7.46	3600	213/5JM	01036ET3EHW215JM-S	$3,259	S2	TEFC	60	1.15	11.9	21.2	J	161
	7.46	1800	213/5JM	01018ET3EHW215JM-S	$3,250	S2	TEFC	60	1.15	12.1	20.41	H	130
15	11.19	3600	213/5JM	01536ET3EHW215JM-S	$3,611	S2	TEFC	60	1.15	17	22.78	J	154
	11.19	3600	254/6JM	01536ET3EHW254JM-S	$5,484	S2	TEFC	60	1.15	17.4	24.07	G	175
	11.19	1800	254/6JM	01518ET3EHW254JM-S	$5,825	S2	TEFC	60	1.15	18.2	24.07	G	197
20	14.91	3600	254/6JM	02036ET3EHW256JM-S	$6,661	S2	TEFC	60	1.15	22.7	24.86	G	211
	14.91	1800	254/6JM	02018ET3EHW256JM-S	$6,769	S2	TEFC	60	1.15	24.7	24.86	H	227

Find the **Drive Match** for your **HydroWash™** Motor on page 21

HydroWash™

Rigid Base

HP	RPM	Frame	Catalog Number	List Price	Multi.	Enclosure	SF	Voltage	FL Amps @ high	C Dim	kVA Code	Appr. Ship. Wt (lbs)
0.5	1800	56	.5018NT3EHW56-S	$610	S2	TENV	1.15	230/460	0.986	10.291	P	28
	1800	56	.5018NT3HHW56-S	$615	S2	TENV	1.15	575	0.789	10.291	P	28
0.75	1800	56	.7518NT3EHW56-S	$668	S2	TENV	1.15	230/460	1.3	10.685	N	31
	1800	56	.7518NT3HHW56-S	$670	S2	TENV	1.15	575	1.04	10.685	N	31
1	3600	143T	00136NT3EHW56-S	$750	S2	TENV	1.15	230/460	1.42	10.788	N	32
	1800	56	00118NT3HHW56-S	$796	S2	TENV	1.15	575	1.18	11.473	M	38
	1800	56	00118NT3EHW56-S	$796	S2	TENV	1.15	230/460	1.47	11.473	M	38
	1200	145T	00112NT3EHW145T-S	$918	S2	TEFC	1.15	230/460	1.58	13.976	J	39
1.5	3600	143T	00156NT3EHW143TC-S	$749	S2	TENV	1.15	230/460	1.93	11.699	M	39
	1800	145T	00158NT3HHW145T-S	$834	S2	TENV	1.15	575	1.82	11.574	L	42
	1800	145T	00158NT3EHW145T-S	$834	S2	TENV	1.15	230/460	2.28	11.574	L	42
2	3600	145T	00236ET3EHW145T-S	$836	S2	TENV	1.15	230/460	2.75	12.362	P	43
	1800	145T	00218ET3HHW145T-S	$931	S2	TEFC	1.15	575	2.18	13.582	K	42
	1800	145T	00218ET3EHW145T-S	$931	S2	TEFC	1.15	230/460	2.72	13.582	K	42
3	3600	182/4T	00336ET3EHW182T-S	$1,340	S2	TEFC	1 .15	230/460	3 .7	16 .339	K	67
	1800	182/4T	00318ET3EHW182T-S	$1,315	S2	TEFC	1 .15	230/460	3 .8	17 .913	K	89
5	3600	182/4T	00536ET3EHW184T-S	$1,628	S2	TEFC	1 .15	230/460	5 .9	17 .913	J	87
	1800	182/4T	00518ET3EHW184T-S	$1,640	S2	TEFC	1 .15	230/460	6 .5	17 .913	J	82
7 .5	3600	182/4T	00736ET3EHW184T-S	$1,978	S2	TEFC	1 .15	230/460	8 .6	17 .126	H	91
	3600	213/5T	00736ET3EHW213T-S	$2,040	S2	TEFC	1 .15	230/460	8 .7	20 .079	H	145
	1800	213/5T	00718ET3EHW213T-S	$2,046	S2	TEFC	1 .15	230/460	9 .1	18 .898	H	133
10	1800	213/5T	01018ET3EHW215T-S	$2,350	S2	TEFC	1 .15	230/460	12 .2	19 .291	H	140
15	1800	254/6T	01518ET3EHW254T-S	$4,602	S2	TEFC	1 .15	230/460	18 .2	22 .559	G	236
20	1800	254/6T	02018ET3EHW256T-S	$5,571	S2	TEFC	1 .15	230/460	24 .7	23 .346	H	266

HydroWash™ Motor and CFW500 Washdown Drive Quick Selection Quide

HydroWash™ - White Epoxy - TEFC - C-Face - Foot Mount

HP	RPM	Volts	Catalog Number	Motor List Price	FL Amps @ high	230V Drive	Drive List Price	460V Drive	Drive List Price
0.5	1800	230/460	.5018NT3EHW56C*	$644	0.80	CFW500A01P6B2DB66G2	$775	CFW500A01P0T4DB66G2	$950
0.75	1800	230/460	.7518NT3EHW56C*	$720	1.20	CFW500A02P6B2DB66G2	$800	CFW500A01P6T4DB66G2	$975
1	1800	230/460	00118NT3EHW56C*	$843	1.50	CFW500A04P3B2DB66G2	$850	CFW500A01P6T4DB66G2	$975
		230/460	00118NT3EHW143TC*	$859	1.50	CFW500A04P3B2DB66G2	$850	CFW500A01P6T4DB66G2	$975
1.5	1800	230/460	00158ET3EHW56C	$860	2.20	CFW500A07P3B2DB66G2	$1,015	CFW500A02P6T4DB66G2	$990
		230/460	00158ET3EHW145TC	$880	2.20	CFW500A07P3B2DB66G2	$1,015	CFW500A02P6T4DB66G2	$990
2	1800	230/460	00218ET3EHW56C	$1,035	2.80	CFW500A07P3B2DB66G2	$1,015	CFW500A04P3T4DB66G2	$1,175
		230/460	00218ET3EHW145TC	$1,060	2.80	CFW500A07P3B2DB66G2	$1,015	CFW500A04P3T4DB66G2	$1,175
	1200	230/460	00212ET3EHW184TC-S	$1,410	3.0	CFW500A07P3B2DB66G2	$1,015	CFW500A04P3T4DB66G2	$1,175
3	3600	230/460	00336ET3EHW182TC-S	$1,409	3.7	CFW500A10P0B2DB66G2	$1,095	CFW500A04P3T4DB66G2	$1,175
	1800	230/460	00318ET3EHW182TC-S	$1,380	3.8	CFW500A10P0B2DB66G2	$1,095	CFW500A04P3T4DB66G2	$1,175
	1200	230/460	00312ET3EHW213TC-S	$1,850	4.2	CFW500A10P0B2DB66G2	$1,095	CFW500A04P3T4DB66G2	$1,175
5	3600	230/460	00536ET3EHW184TC-S	$1,700	5.9	CFW500A16P0T2DB66G2	$1,350	CFW500A06P5T4DB66G2	$1,400
	1800	230/460	00518ET3EHW184TC-S	$1,728	6.5	CFW500A16P0T2DB66G2	$1,350	CFW500A06P5T4DB66G2	$1,400
	1200	230/460	00512ET3EHW215TC-S	$2,185	6.7	CFW500A16P0T2DB66G2	$1,350	CFW500A10P0T4DB66G2	$1,650
7.5	3600	230/460	00736ET3EHW184TC-S	$2,082	8.6	CFW500B24P0T2DB66G2	$1,950	CFW500A10P0T4DB66G2	$1,650
	3600	230/460	00736ET3EHW213TC-S	$2,214	8.7	CFW500B24P0T2DB66G2	$1,950	CFW500A10P0T4DB66G2	$1,650
	1800	230/460	00718ET3EHW213TC-S	$2,230	9.1	CFW500B24P0T2DB66G2	$1,950	CFW500A10P0T4DB66G2	$1,650
	1200	230/460	00712ET3EHW254TC-S	$3,795	10.0	CFW500B24P0T2DB66G2	$1,950	CFW500A10P0T4DB66G2	$1,650
10	3600	230/460	01036ET3EHW215TC-S	$2,650	11.5	CFW500B24P0T2DB66G2	$1,950	CFW500B14P0T4DB66G2	$2,050
	1800	230/460	01018ET3EHW215TC-S	$2,568	12.2	CFW500B28P0T2DB66G2	$2,275	CFW500B14P0T4DB66G2	$2,050
	1200	230/460	01012ET3EHW256TC-S	$4,345	13.8	CFW500B28P0T2DB66G2	$2,275	CFW500B14P0T4DB66G2	$2,050
15	3600	230/460	01536ET3EHW215TC-S	$3,250	17.0	-	-	CFW500B24P0T4DB66G2	$3,025
	3600	230/460	01536ET3EHW254TC-S	$4,859	17.4	-	-	CFW500B24P0T4DB66G2	$3,025
	1800	230/460	01518ET3EHW254TC-S	$4,826	18.2	-	-	CFW500B24P0T4DB66G2	$3,025
20	3600	230/460	02036ET3EHW256TC-S	$5,772	22.7	-	-	CFW500B24P0T4DB66G2	$3,025
	1800	230/460	02018ET3EHW256TC-S	$5,830	24.7	-	-	CFW500B31P0T4DB66G2	$3,650
25	3600	230/460	02536ET3EHW256TC-S	$6,887	28.5	-	-	CFW500B31P0T4DB66G2	$3,650

* TENV

continued on next page

Drive Match

HydroWash™ - White Epoxy - TEFC - C-Face - Footless

HP	RPM	Volts	Catalog Number	Motor List Price	460V Amps	230V Drive	Drive List Price	460V Drive	Drive List Price
0.5	1800	230/460	.5018NT3EHW56CFL*	$510	0.80	CFW500A01P6B2DB66G2	$775	CFW500A01P0T4DB66G2	$950
0.75	1800	230/460	.7518NT3EHW56CFL*	$553	1.20	CFW500A02P6B2DB66G2	$800	CFW500A01P6T4DB66G2	$975
1	1800	230/460	00118NT3EHW56CFL*	$599	1.50	CFW500A04P3B2DB66G2	$850	CFW500A01P6T4DB66G2	$975
		230/460	00118NT3EHWR143TC*	$628	1.50	CFW500A04P3B2DB66G2	$850	CFW500A01P6T4DB66G2	$975
1.5	1800	230/460	00158ET3EHW56CFL	$830	2.20	CFW500A07P3B2DB66G2	$1,015	CFW500A02P6T4DB66G2	$990
		230/460	00158ET3EHWR145TC	$850	2.20	CFW500A07P3B2DB66G2	$1,015	CFW500A02P6T4DB66G2	$990
2	1800	230/460	00218ET3EHW56CFL	$995	2.80	CFW500A07P3B2DB66G2	$1,015	CFW500A04P3T4DB66G2	$1,175
		230/460	00218ET3EHWR145TC	$1,020	2.80	CFW500A07P3B2DB66G2	$1,015	CFW500A04P3T4DB66G2	$1,175
3	1800	230/460	00318ET3EHWR182TC-S	$1,259	3.81	CFW500A10P0B2DB66G2	$1,095	CFW500A04P3T4DB66G2	$1,175
5	3600	230/460	00536ET3EHWR182TC-S	$1,600	5.90	CFW500A16P0T2DB66G2	$1,350	CFW500A06P5T4DB66G2	$1,400
	1800	230/460	00518ET3EHWR184TC-S	$1,592	6.49	CFW500A16P0T2DB66G2	$1,350	CFW500A06P5T4DB66G2	$1,400
7.5	3600	230/460	00736ET3EHWR213TC-S	$2,010	8.67	CFW500B24P0T2DB66G2	$1,950	CFW500A10P0T4DB66G2	$1,650
	1800	230/460	00718ET3EHWR213TC-S	$2,011	9.07	CFW500B24P0T2DB66G2	$1,950	CFW500A10P0T4DB66G2	$1,650
10	3600	230/460	01036ET3EHWR215TC-S	$2,442	11.50	CFW500B24P0T2DB66G2	$1,950	CFW500B14P0T4DB66G2	$2,050
	1800	230/460	01018ET3EHWR215TC-S	$2,394	12.20	CFW500B28P0T2DB66G2	$2,275	CFW500B14P0T4DB66G2	$2,050
15	3600	230/460	01536ET3EHWR215TC-S	$3,052	17.00	-	-	CFW500B24P0T4DB66G2	$3,025

*TENV

HydroWash™ - White Epoxy - TEFC - Rigid Base

HP	RPM	Volts	Catalog Number	Motor List Price	460V Amps	230V Drive	Drive List Price	460V Drive	Drive List Price
3	3600	230/460	00336ET3EHW182T-S	$1,340	3.7	CFW500A10P0B2DB66G2	$1,095	CFW500A04P3T4DB66G2	$1,175
	1800	230/460	00318ET3EHW182T-S	$1,315	3.8	CFW500A10P0B2DB66G2	$1,095	CFW500A04P3T4DB66G2	$1,175
5	3600	230/460	00536ET3EHW184T-S	$1,628	5.9	CFW500A16P0T2DB66G2	$1,350	CFW500A06P5T4DB66G2	$1,400
	1800	230/460	00518ET3EHW184T-S	$1,640	6.5	CFW500A16P0T2DB66G2	$1,350	CFW500A06P5T4DB66G2	$1,400
7.5	3600	230/460	00736ET3EHW184T-S	$1,978	8.6	CFW500B24P0T2DB66G2	$1,950	CFW500A10P0T4DB66G2	$1,650
	3600	230/460	00736ET3EHW213T-S	$2,040	8.7	CFW500B24P0T2DB66G2	$1,950	CFW500A10P0T4DB66G2	$1,650
	1800	230/460	00718ET3EHW213T-S	$2,046	9.1	CFW500B24P0T2DB66G2	$1,950	CFW500A10P0T4DB66G2	$1,650
10	1800	230/460	01018ET3EHW215T-S	$2,350	12.2	CFW500B28P0T2DB66G2	$2,275	CFW500B14P0T4DB66G2	$2,050
15	1800	230/460	01518ET3EHW254T-S	$4,602	18.2	-	-	CFW500B24P0T4DB66G2	$3,025
20	1800	230/460	02018ET3EHW256T-S	$5,571	24.7	-	-	CFW500B31P0T4DB66G2	$3,650

CFW500-G2 (GENERATION-2)

The CFW500 has advanced technology plug and play options, developed for fast commissioning, providing great flexibility and competitive advantage while offering excellent performance and reliability. Designed for exclusively industrial or professional use, perfect for OEM, system integrators, panel installers and End Users providing great benefit from the added value. With Generation-2 (G2), the CFW500 drives now offer more features in the same footprint as Generation-1 drives. The power range of CFW500-IP20-G2 drive is now extended to 75HP @ 230VAC and 175HP @ 460VAC. The CFW500-G2 drive also is also available in IP66/ NEMA4X Washdown enclosure which is rated for indoor and outdoor installation in direct sunlight.

Standard Features

- Same programming as other WEG VFDs including CFW500-Generation-1 drives.
- Built-in SoftPLC.
- Scalar, Vector Control (Sensorless and closed loop with encoder feedback) & VVW PM (suitable for fan, Pump and compressor).
- IP20 & NEMA1 (with NEMA1 kit) Enclosure.
- NEMA 4X (IP66) Washdown Enclosure with and without disconnect switch, suitable for indoor and outdoor use (in direct sunlight).
- 200-240V, 380-480V or 500-600 input voltage.
- Heavy Duty rated - 150% current overload capacity.
- 0 to 500 Hz output frequency.
- 2.5 to 15 kHz adjustable switching frequency (5 kHz standard)
- Built-in 24Vdc Power supply (max. 150 mA).
- Built-in RS-485 (Modbus RTU/BACnet) communication.
- Four isolated programmable digital inputs.
- One programmable relay output (1NO, 1NC, 240vac 0.5A).
- One programmable transistor output.
- One isolated programmable analog input (0-10V, 0/4-20mA).
- One isolated programmable analog output (0-10V, 0/4-20mA).
- Optional Safe Torque off Module.
- Pump Genius – Simplex, Multiplex (up to three pumps in parallel) like CFW11 Pump Genius.
- WLP and WPS compatible.

For Indoor / Outdoor Use

Applications

- Pumps
- Fans/ventilators
- Blowers
- Conveyors
- Rollout tables
- Mixers/Blenders
- Commercial dryers
- Extruders
- General machinery
- Agitators
- Any washdown (for NEMA4X/IP66)

CFW500 - N4X/IP66 WASHDOWN VFD W/O DISCONNECT SWITCH

Motor Voltage	ND/VT [1]		HD/CT [1]		Catalog Number	Braking Transistor	Frame Size [4]	Dimensions (in.) HxWxD	Approx. Weight (lbs.)	List Price	Multiplier New (Old)
	Motor HP [2]	Drive Amps [3]	Motor HP [2]	Drive Amps [3]							
230 Vac / 3 Phase	**Input Power Supply: Single or Three-Phase 200-240 Vac**										
	1/3	1.6	1/3	1.6	CFW500A01P6B2DB66G2	Yes	A	10.4 x 6.5 x 8.9	22.0	**$775**	V1W (V1)
	3/4	2.6	3/4	2.6	CFW500A02P6B2DB66G2	Yes	A	10.4 x 6.5 x 8.9	22.0	**$800**	V1W (V1)
	1 1/2	4.3	1 1/2	4.3	CFW500A04P3B2DB66G2	Yes	A	10.4 x 6.5 x 8.9	22.0	**$850**	V1W (V1)
	2	7.3	2	7.3	CFW500A07P3B2DB66G2	Yes	A	10.4 x 6.5 x 8.9	22.0	**$1,015**	V1W (V1)
	3	10	3	10	CFW500A10P0B2DB66G2	Yes	A	10.4 x 6.5 x 8.9	22.0	**$1,095**	V1W (V1)
	Input Power Supply: Three-Phase 200-240 Vac										
	5	16	5	16	CFW500A16P0T2DB66G2	Yes	A	10.4 x 6.5 x 8.9	22.0	**$1,350**	V1W (V1)
	7 1/2	24	7 1/2	24	CFW500B24P0T2DB66G2	Yes	B	13.4 x 8.5 x 8.9	26.5	**$1,950**	V1W (V1)
	10	28	10	28	CFW500B28P0T2DB66G2	Yes	B	13.4 x 8.5 x 8.9	26.5	**$2,275**	V1W (V1)
	10	33	10	33	CFW500B33P0T2DB66G2	Yes	B	13.4 x 8.5 x 8.9	26.5	**$2,675**	V1W (V1)
	15	47	15	47	CFW500C47P0T2DB66G2 [5]	Yes	C	18.7 x 12.6 x 11.4	45.0	**$3,750**	V1W (V1)
	25	70	20	56	CFW500C56P0T2DB66G2 [5]	Yes	C	18.7 x 12.6 x 11.4	45.0	**$4,400**	V1W (V1)
460 Vac / 3 Phase	**Input Power Supply: Three-Phase 380-480 Vac**										
	1/2	1	1/2	1	CFW500A01P0T4DB66G2	Yes	A	10.4 x 6.5 x 8.9	22.0	**$950**	V1W (V1)
	1	1.6	1	1.6	CFW500A01P6T4DB66G2	Yes	A	10.4 x 6.5 x 8.9	22.0	**$975**	V1W (V1)
	1 1/2	2.6	1 1/2	2.6	CFW500A02P6T4DB66G2	Yes	A	10.4 x 6.5 x 8.9	22.0	**$990**	V1W (V1)
	3	4.3	3	4.3	CFW500A04P3T4DB66G2	Yes	A	10.4 x 6.5 x 8.9	22.0	**$1,175**	V1W (V1)
	5	6.5	5	6.5	CFW500A06P5T4DB66G2	Yes	A	10.4 x 6.5 x 8.9	22.0	**$1,400**	V1W (V1)
	7 1/2	10	7 1/2	10	CFW500A10P0T4DB66G2	Yes	A	10.4 x 6.5 x 8.9	22.0	**$1,650**	V1W (V1)
	10	14	10	14	CFW500B14P0T4DB66G2	Yes	B	13.4 x 8.5 x 8.9	26.5	**$2,050**	V1W (V1)
	10	16	10	16	CFW500B16P0T4DB66G2	Yes	B	13.4 x 8.5 x 8.9	26.5	**$2,275**	V1W (V1)
	15	24	15	24	CFW500B24P0T4DB66G2	Yes	B	13.4 x 8.5 x 8.9	26.5	**$3,025**	V1W (V1)
	25	31	25	31	CFW500B31P0T4DB66G2	Yes	B	13.4 x 8.5 x 8.9	26.5	**$3,650**	V1W (V1)
	30	45	30	39	CFW500C39P0T4DB66G2 [5]	Yes	C	18.7 x 12.6 x 11.4	45.0	**$4,795**	V1W (V1)
	50	59.2	40	49	CFW500C49P0T4DB66G2 [5]	Yes	C	18.7 x 12.6 x 11.4	45.0	**$6,100**	V1W (V1)
575 Vac / 3 Phase [6]	**Input Power Supply: Three-Phase 500-600 Vac**										
	1 1/2	1.7	1 1/2	1.7	CFW500B01P7T5DB66	Yes	B	13.4 x 8.5 x 8.9	26.5	**$1,590**	V1W (V1)
	3	3	3	3	CFW500B03P0T5DB66	Yes	B	13.4 x 8.5 x 8.9	26.5	**$1,670**	V1W (V1)
	3	4.3	3	4.3	CFW500B04P3T5DB66	Yes	B	13.4 x 8.5 x 8.9	26.5	**$1,890**	V1W (V1)
	7 1/2	7	7 1/2	7	CFW500B07P0T5DB66	Yes	B	13.4 x 8.5 x 8.9	26.5	**$2,115**	V1W (V1)
	10	10	10	10	CFW500B10P0T5DB66	Yes	B	13.4 x 8.5 x 8.9	26.5	**$2,330**	V1W (V1)
	10	12	10	12	CFW500B12P0T5DB66	Yes	B	13.4 x 8.5 x 8.9	26.5	**$2,615**	V1W (V1)

NOTES:
1. ND (Normal Duty) / VT (Variable Torque): 110% Overload / 60 Sec;
HD (Heavy Duty) / CT (Constant Torque): 150% Overload / 60 Sec;
2. "HP" rating based on WEG W22 motors "average FLA values". Use as a guide only.
3. Motor FLA may vary with speed and manufacturer. ALWAYS compare motor FLA to Nominal AMPS of drive.
4. Frame Size A, B & C are rated for 40°C ambient temperature.
5. Available in 3Q of 2024.
6. All 575V drives are non-stocked items and are still Generation-1 drives, consult WEG for availability.

CFW500 - N4X/IP66 WASHDOWN VFD WITH DISCONNECT SWITCH

Motor Voltage	ND/VT [1]		HD/CT [1]		Catalog Number	Braking Transistor	Frame Size [4]	Dimensions (in.) HxWxD	Approx. Weight (lbs.)	List Price	Multiplier New (Old)
	Motor HP [2]	Drive Amps [3]	Motor HP [2]	Drive Amps [3]							
230 Vac / 3 Phase	Input Power Supply: Single or Three-Phase 200-240 Vac										
	1/3	1.6	1/3	1.6	CFW500A01P6B2DB66DSG2	Yes	A	10.4 x 6.5 x 9.9	22.0	$895	V1W (V1)
	3/4	2.6	3/4	2.6	CFW500A02P6B2DB66DSG2	Yes	A	10.4 x 6.5 x 9.9	22.0	$920	V1W (V1)
	1 1/2	4.3	1 1/2	4.3	CFW500A04P3B2DB66DSG2	Yes	A	10.4 x 6.5 x 9.9	22.0	$980	V1W (V1)
	2	7.3	2	7.3	CFW500A07P3B2DB66DSG2	Yes	A	10.4 x 6.5 x 9.9	22.0	$1,170	V1W (V1)
	3	10	3	10	CFW500A10P0B2DB66DSG2	Yes	A	10.4 x 6.5 x 9.9	22.0	$1,255	V1W (V1)
	Input Power Supply: Three-Phase 200-240 Vac										
	5	16	5	16	CFW500A16P0T2DB66DSG2	Yes	A	10.4 x 6.5 x 9.9	22.0	$1,555	V1W (V1)
	7 1/2	24	7 1/2	24	CFW500B24P0T2DB66DSG2	Yes	B	13.4 x 8.5 x 9.9	26.5	$2,245	V1W (V1)
	10	28	10	28	CFW500B28P0T2DB66DSG2	Yes	B	13.4 x 8.5 x 9.9	26.5	$2,620	V1W (V1)
	10	33	10	33	CFW500B33P0T2DB66DSG2	Yes	B	13.4 x 8.5 x 9.9	26.5	$3,080	V1W (V1)
	15	47	15	47	CFW500C47P0T2DB66DSG2 [5]	Yes	C	18.7 x 12.6 x 12.4	45.0	$4,313	V1W (V1)
	25	70	20	56	CFW500C56P0T2DB66DSG2 [5]	Yes	C	18.7 x 12.6 x 12.4	45.0	$5,060	V1W (V1)
460 Vac / 3 Phase	Input Power Supply: Three-Phase 380-480 Vac										
	1/2	1	1/2	1	CFW500A01P0T4DB66DSG2	Yes	A	10.4 x 6.5 x 9.9	22.0	$1,095	V1W (V1)
	1	1.6	1	1.6	CFW500A01P6T4DB66DSG2	Yes	A	10.4 x 6.5 x 9.9	22.0	$1,125	V1W (V1)
	1 1/2	2.6	1 1/2	2.6	CFW500A02P6T4DB66DSG2	Yes	A	10.4 x 6.5 x 9.9	22.0	$1,140	V1W (V1)
	3	4.3	3	4.3	CFW500A04P3T4DB66DSG2	Yes	A	10.4 x 6.5 x 9.9	22.0	$1,350	V1W (V1)
	5	6.5	5	6.5	CFW500A06P5T4DB66DSG2	Yes	A	10.4 x 6.5 x 9.9	22.0	$1,610	V1W (V1)
	7 1/2	10	7 1/2	10	CFW500A10P0T4DB66DSG2	Yes	A	10.4 x 6.5 x 9.9	22.0	$1,900	V1W (V1)
	10	14	10	14	CFW500B14P0T4DB66DSG2	Yes	B	13.4 x 8.5 x 9.9	26.5	$2,360	V1W (V1)
	10	16	10	16	CFW500B16P0T4DB66DSG2	Yes	B	13.4 x 8.5 x 9.9	26.5	$2,620	V1W (V1)
	15	24	15	24	CFW500B24P0T4DB66DSG2	Yes	B	13.4 x 8.5 x 9.9	26.5	$3,480	V1W (V1)
	25	31	25	31	CFW500B31P0T4DB66DSG2	Yes	B	13.4 x 8.5 x 9.9	26.5	$4,200	V1W (V1)
	30	45	30	39	CFW500C39P0T4DB66DSG2 [5]	Yes	C	18.7 x 12.6 x 12.4	45.0	$5,514	V1W (V1)
	50	59.2	40	49	CFW500C49P0T4DB66DSG2 [5]	Yes	C	18.7 x 12.6 x 12.4	45.0	$7,015	V1W (V1)
575 Vac / 3 Phase [6]	Input Power Supply: Three-Phase 500-600 Vac										
	1 1/2	1.7	1 1/2	1.7	CFW500B01P7T5DB66DS	Yes	B	13.4 x 8.5 x 9.9	26.5	$1,830	V1W (V1)
	3	3	3	3	CFW500B03P0T5DB66DS	Yes	B	13.4 x 8.5 x 9.9	26.5	$1,925	V1W (V1)
	3	4.3	3	4.3	CFW500B04P3T5DB66DS	Yes	B	13.4 x 8.5 x 9.9	26.5	$2,175	V1W (V1)
	7 1/2	7	7 1/2	7	CFW500B07P0T5DB66DS	Yes	B	13.4 x 8.5 x 9.9	26.5	$2,435	V1W (V1)
	10	10	10	10	CFW500B10P0T5DB66DS	Yes	B	13.4 x 8.5 x 9.9	26.5	$2,680	V1W (V1)
	10	12	10	12	CFW500B12P0T5DB66DS	Yes	B	13.4 x 8.5 x 9.9	26.5	$3,005	V1W (V1)

NOTES:
1. ND (Normal Duty) / VT (Variable Torque): 110% Overload / 60 Sec;
HD (Heavy Duty) / CT (Constant Torque): 150% Overload / 60 Sec;
2. "HP" rating based on WEG W22 motors "average FLA values". Use as a guide only.
3. Motor FLA may vary with speed and manufacturer. ALWAYS compare motor FLA to Nominal AMPS of drive.
4. Frame Size A, B & C are rated for 40°C ambient temperature.
5. Available in 3Q of 2024.
6. All 575V drives are non-stocked items and are still Generation-1 drives, consult WEG for availability.

Options and Accessories

Type	CATALOG NUMBER	Description	Apprx. Shpg. Wt. (lbs.)	List Price	Multiplier New (Old)
I/O	CFW500-IOS [1]	CFW500 I/O Module; 4 DI, 1 AI, 1 AO, 1 DOR, 1 DOT, 1 RS485, 10vdc, 24vdc	0.2	$110	V1G (V1)
I/O	CFW500-IOD	CFW500 I/O Module; 8 DI, 1 AI, 1 AO, 1 DOR, 4 DOT, 1 RS485, 10vdc, 24vdc	0.2	$141	V1G (V1)
I/O	CFW500-IOAD	CFW500 I/O Module; 6 DI, 3 AI, 2 AO, 1 DOR, 3 DOT, 1 RS485, 10vdc, 24vdc	0.2	$182	V1G (V1)
I/O	CFW500-IOR-B	CFW500 I/O Module; 5 DI, 1 AI, 1 AO, 4 DOR, 1 DOT, 1 RS485, 10vdc, 24vdc	0.2	$125	V1G (V1)
Encoder Input	CFW500-ENC	CFW500 Encoder Module; Quad Input A & B, 1 RS485, 5 DI, 1 AI, 1 AO, 3 DOR, 1 DOT, 24vdc	0.2	$210	V1G (V1)
USB Card	CFW500-CUSB	CFW500 Comm. Module; 1 USB, 1 RS485, 4 DI, 1 AI, 1 AO, 1 DOR, 1 DOT, 10vdc, 24vdc	0.2	$210	V1G (V1)
RS232 Card	CFW500-CRS232	CFW500 Comm. Module; 1 RS232, 1 RS485, 4 DI, 1 AI, 1 AO, 1 DOR, 1 DOT, 24vdc	0.2	$138	V1G (V1)
RS485 Card	CFW500-CRS485-B	CFW500 Comm. Module; 2 RS485, 4 DI, 2 AI, 1 AO, 2 DOR, 1 DOT, 10vdc, 24vdc	0.2	$143	V1G (V1)
CANopen Card	CFW500-CCAN	CFW500 Comm. Module; 1 CAN/DeviceNet, 1 RS485, 2 DI, 1 AI, 1 AO, 1 DOR, 1 DOT, 10vdc, 24vdc	0.2	$138	V1G (V1)
Profibus DP Card	CFW500-CPDP	CFW500 Comm. Module; 2 DI, 1 AI, 1 AO, 1 DOR, 1 DOT, 1 Profibus DP, 1 RS485, 24vdc (DB9 connector)	0.2	$405	V1G (V1)
Profibus DP & DP-V1 Module	CFW500-CPDP2	CFW500 Comm. Module; 1-Profibus DP & DP-V1 100BASE TX RJ-45 Port, 1-RS485, 2-DI, 1-AI, 1-AO, 1-DOR, 1-DOT, 24vdc (Terminal Block Connector)	0.2	$445	V1G (V1)
Modbus TCP Comm. Module	CFW500-CEMB-TCP	CFW500 Comm. Module; 1-Modbus TCP 100BASE TX RJ-45 Port, 1-RS485, 2-DI, 1-AI, 1-AO, 1-DOR, 1-DOT, 24vdc	0.2	$499	V1G (V1)
ProfiNet I/O Comm. Module	CFW500-CEPN-IO	CFW500 Comm. Module; 1-ProfiNet I/O 100BASE TX RJ-45 Port, 1-RS485, 2-DI, 1-AI, 1-AO, 1-DOR, 1-DOT, 24vdc	0.2	$499	V1G (V1)
EtherNet IP Comm. Module	CFW500-CETH-IP	CFW500 Comm. Module; 2-DI, 1-AI, 1-AO, 1-DOR, 1-DOT, 1-RS485, 1-EtherNet IP 100BASE TX RJ-45 Port, 24vdc	0.2	$499	V1G (V1)
Dual Port Ethernet Module (Ethernet/IP or Modbus TCP)	CFW500-CETH2	CFW500 Dual Port Comm. Module: 2-DI, 1-AI, 1-DOT, 1-RS485, 2-EtherNet 100BASE TX RJ-45 Ports. **Note: The module will require external 24vdc power to use 1-DOT. The CFW500-G2 drive must have FM V3.9x or above to use this module.**	0.3	$575	V1G (V1)
STO Module	CFW500-SFY2 [2]	CFW500 Safety Function Module; Safe Torque Off (STO) / Stop Category 0, Safe Stop 1 Time Controlled (SS1-t) / Stop Category 1; Safety Category: SIL 3, PL e	1.8	$140	V1G (V1)
STO Module Plug	CFW50X-STO-JMP	CFW50x STO module plug	0.2	$12	PTD
Flash Memory Module	CFW500-MMF	CFW500 Flash Memory Module for saving and reloading program and parameters to / from the drive.	0.2	$189	V1G (V1)
Remote Keypad - Non Text	CFW500-HMIR [3]	CFW500 Remote non-text Keypad for mounting through enclosure door (Mounting Frame Kit is not required).	0.6	$169	V1G (V1)
Remote Keypad - Advanced Text	HMI-01 [4]	CFW500 Remote Advanced Text Keypad for mounting through enclosure door (Mounting Frame Kit is required).	0.4	$205	V1G (V1)
Remote Keypad - Advanced Text Frame Kit	CFW500-RHMIF	CFW500 Remote Advanced Text Keypad enclosure door mounting frame kit	0.5	$25	V1G (V1)
HMI Cable 1M	CFW500-CCHMIR01M	3.3 ft (1 meter) Remote Keypad Cable	0.5	$23	V1G (V1)
HMI Cable 2M	CFW500-CCHMIR02M	6.6 ft (2 meter) Remote Keypad Cable	0.7	$31	V1G (V1)
HMI Cable 3M	CFW500-CCHMIR03M	9.9 ft (3 meter) Remote Keypad Cable	1.0	$41	V1G (V1)
HMI Cable 5M	CFW500-CCHMIR05M	16 ft (5 meter) Remote Keypad Cable	1.2	$51	V1G (V1)
HMI Cable 7.5M	CFW500-CCHMIR075M	25 ft (7.5 meter) Remote Keypad Cable	1.5	$61	V1G (V1)
HMI Cable 10M	CFW500-CCHMIR010M	33 ft (10 meter) Remote Keypad Cable	2.0	$72	V1G (V1)
NEMA1 Conduit Kit	CFW500-KN1A	NEMA 1 kit – Frame Size A	2.0	$28	V1G (V1)
NEMA1 Conduit Kit	CFW500-KN1B	NEMA 1 kit – Frame Size B	3.0	$33	V1G (V1)
NEMA1 Conduit Kit	CFW500-KN1C	NEMA 1 kit – Frame Size C	3.0	$44	V1G (V1)
NEMA1 Conduit Kit	CFW500-KN1D	NEMA 1 kit – Frame Size D	3.0	$59	V1G (V1)
NEMA1 Conduit Kit	CFW500-KN1E	NEMA 1 kit – Frame Size E	6.0	$64	V1G (V1)
NEMA1 Conduit Kit	CFW500-KN1F	NEMA 1 kit – Frame Size F	12.0	$165	V1G (V1)
NEMA1 Conduit Kit	CFW500-KN1G	NEMA 1 kit – Frame Size G	17.0	$215	V1G (V1)
Cable Shield Clamp Kit	CFW500-KPCSA	Cable Shield Clamp Kit for Frame A	1.0	$41	V1G (V1)
Cable Shield Clamp Kit	CFW500-KPCSB	Cable Shield Clamp Kit for Frame B	1.0	$44	V1G (V1)
Cable Shield Clamp Kit	CFW500-KPCSC	Cable Shield Clamp Kit for Frame C	1.1	$46	V1G (V1)
Cable Shield Clamp Kit	CFW500-KPCSD	Cable Shield Clamp Kit for Frame D	1.1	$51	V1G (V1)
Cable Shield Clamp Kit	CFW500-KPCSE	Cable Shield Clamp Kit for Frame E	6.0	$64	V1G (V1)
Cable Shield Clamp Kit	CFW500-KPCSF	Cable Shield Clamp Kit for Frame F	15.0	$140	V1G (V1)
Cable Shield Clamp Kit	CFW500-KPCSG	Cable Shield Clamp Kit for Frame G	18.0	$180	V1G (V1)
CFW500 Demo Suitcase	CFW500-DEMO-BLK	CFW500 Black Demo Suitcase with Remote Text keypad and STO Module	45.0	$5,585	V1G (V1)

Notes:

1) The "CFW500-IOS" module is included as standard with CFW500-IP20 & IP66 Drives.
2) The "CFW500-SFY2" Module can be installed in the CFW500-IP20 & IP66 drives in addition to the "CFW500-IOS" or any other I/O or communication module. The "CFW500-SFY2" module only works with 230V & 460VAC, CFW500-G2 (Generation-2) drives.For CFW500-IP20, Frame-A to E VFDs, the NEMA1 Kit top cover to protect the VFD from falling dust can not be used if the "CFW500-SFY2" is installed on the drive.
3) The "CFW500-HMIR" Remote Keypad (Non-Text) requires Qty. (1) CFW500-CCHIR0xM cable. ("x" represents the cable length in meters)
4) The "HMI-01" remote Keypad (Advanced Text) requires Qty. (1) CFW500-RHMIF & Qty. (1) CFW500-CCHIR0xM cable. ("x" represents the cable length in meters). This keypad only works with 230VAC & 460VAC, CFW500-G2 (Generation-2) drives.

CFW500-N4X/IP66 Technical Data
Technical Data

Power rating	**Power supply**	Tolerance: -15 to +10%
		Frequency: 50/60 Hz (48 Hz to 62 Hz)
		Phase imbalance: ≤3% of the rated phase-phase input voltage
		Transient voltages and overvoltages according to Category III (EN 61010/UL 508C)
		Maximum of 10 (line) connections per hour (1 every 6 minutes)
		Typical efficiency: ≥97%
Control	**Method**	V/F (scalar) VVW: voltage vector control Vector without encoder (sensorless) and closed loop vector with encoder PM VVW: voltage vector control for permanent magnet motors
	Output frequency	0 to 500 Hz, resolution of 0.015 Hz
Performance	**V/F Control**	Speed regulation: 1% of the rated speed (with slip compensation) Speed variation range: 1:20
	Vector control (VVW)	Speed regulation: 1% of the rated speed Speed variation range: 1:30
	Sensorless	Speed regulation: 0.5% of the rated speed Speed variation range: 1:100
	Vector control with Encoder	Speed regulation: 0.1% of the rated speed Speed variation range: 1:100
	PM VVW Control	Regulation: 0.1 % of the rated speed Speed variation range: 1:20
Environment conditions	**Temperature around the CFW500**	14°F to 122°F (-10 °C to 50 °C) - IP20 (sizes A to E) 14°F to 104°F (-10 °C to 40 °C) - IP20 (sizes A to E) when installed side by side 14°F to 104°F (-10 °C to 40 °C) - NEMA 1 (sizes A to E) 14°F to 104°F (-10 °C to 40 °C) - IP20, NEMA 1 (size F) 14°F to 113°F (-10 °C to 45 °C) - IP20, NEMA 1 (size G) 14°F to 104°F (-10 °C to 40 °C) - IP66 (sizes A & B) For CFW500-IP20-Frame A to E & CFW500-IP66-Frame A & B, when operating temperatures are above the specification, it is necessary to apply 2% of current derating for each Celsius degree (ºC), limited to an increase of 10 °C. For CFW500-IP20-Frame F & G, when operating temperatures are above the specification, it is necessary to apply 1% of current derating for each Celsius degree (°C) up to 50 °C, and 2% up to 60 °C (maximum).
	Aggressive environments	Protection Class 3C2 - Standard coating on the internal circuits, according to IEC 60721-3-3 (standard model)
		Protection Class 3C3 - Extra coating - optional, according to IEC 60721-3-3 (optional)
	Air relative humidity	5% to 95% non-condensing
	Altitude	Up to 1,000 m (maximum altitude under normal conditions) 1,000 to 4,000 m: current derating of 1% for each 100 m above 1,000 m of altitude
	Pollution degree	2 (EN 50178 and UL 508C), with non-conductive pollution Condensation must not cause conduction of the accumulated residues
Inputs[1)]	**Analog**	1 isolated input. Levels: (0 to 10) V or (0 to 20) mA or (4 to 20) mA Linearity error ≤0.25% Impedance: 100 kΩ for voltage input, 500 Ω for current input Programmable functions, including PTC input Maximum voltage accepted in the inputs: 30 V dc
	Digital	4 isolated inputs Programmable functions: Active high (PNP): maximum low level of 15 V dc; minimum high level of 20 V dc Active low (NPN): maximum low level of 5 V dc; minimum high level of 9 V dc Maximum input voltage of 30 V dc Input current: 4.5 mA Maximum input current: 5.5 mA
Outputs[1)]	**Analog**	1 isolated output. Levels (0 to 10) V or (0 to 20) mA or (4 to 20) mA Linearity error ≤0.25% Programmable functions RL ≥10 kΩ (0 to 10 V) or RL ≤500 Ω (0 to 20 mA / 4 to 20 mA)
	Relay	1 relay with NO/NC contact Maximum voltage: 240 V ac Maximum current of 0.5 A Programmable functions
	Transistor	1 isolated open sink digital output (using as reference the 24 V dc power supply) Maximum current of 150 mA (maximum capacity of the 24 V dc power supply)[2)] Programmable functions
	Power supply	24 V dc power supply. Maximum capacity: 150 mA[2)] Power supply of 10 V dc. Maximum capacity: 2 mA
Communication	**Selectable plug-in**	Standard Communication: One RS485 (Modbus RTU / BACnet) Port. Optional: CANopen, DeviceNet, Profibus-DP, EtherNet/IP, Modbus-TCP, PROFINET IO, USB, RS485 (two Ports) and RS232 port
Safety	**Protection**	Phase-phase overcurrent/short circuit in the output Phase-ground overcurrent/short circuit in the output Undervoltage/overvoltage in the power Overtemperature of the heatsink Motor overload Overload on the power module (IGBTs) External fault / alarm Programming error
Operating interface (keypad)	**Standard (built in the CFW500)**	9 keys: Run/Stop, Increment, Decrement, Direction of rotation, Jog, Local/Remote, Back/Esc and Enter/Menu LCD Display It allows accessing/changing all the parameters Accuracy of the indications: Current: 5% of the rated current Speed resolution: 0.1 Hz
Protection degree	**IP20**	Sizes A, B, C, D, E, F and G
	NEMA1	Sizes A, B, C, D, E, F and G with NEMA1 kit
	IP66/NEMA4X (Indoor/Outdoor)	Sizes A and B

Notes: 1) The number and/or types of analog/digital inputs/outputs may vary according to the plug-in module (accessory) used. In the table above, the standard plug-in module (CFW500-IOS) was taken into account. For further information, refer to the CFW500 user manual.
2) The maximum capacity of 150 mA considers the load of the 24 V power supply plus the transistor output, that is, the sum of the consumption of both must not exceed 150 mA.

HydroDuty™

THE WORLD ASKS FOR RELIABILITY
WEG DELIVERS PRODUCTS YOU CAN COUNT ON.

IP69K

3 YEAR WARRANTY

Now up to 10 HP

Encapsulated winding and a patented sealing system ensures that our HydroDuty motors keep running when others let you down.

www.weg.net
1-800-ASK-4WEG

WEG's scope of solutions is not limited to the products and solutions presented in this brochure.
Contact WEG for information on additional products and solutions.

For WEG's worldwide operations visit our website

www.weg.net

1-800-ASK-4WEG

info-us@weg.net

Duluth, GA

USWASHDOWN.MOTORS.4.2026

Information contained hearin is subject to change without notice.